# PRODUCT DOCUMENT PACK

Prepared and distributed by KW Commercial Kitchen

## PRODUCT

## Blue Seal Evolution Series B90S-LS 900mm Bench Top With Salamander Support Leg Sta

## Model / SKU: B90S-LS


### KW COMMERCIAL KITCHEN

7/72 Canterbury Road, Bankstown NSW 2200

Phone 1300 001 366

Email sales@kwcommercial.com.au

Web www.kwcommercial.com.au


Scan for the current KW product page

### DOCUMENT NOTICE

The supplier document begins on the next page. KW contact branding is added in a separate footer area and does not replace the supplier's instructions, specifications or warranty terms.


Official supplier source: https://moffat.global.ssl.fastly.net/sites/default/files/products/manual/231534.pdf

BLUE SEAL®

EVOLUTIONSERIES

**B90- LS 900mm Bench Top**

**B90S-LS 900mm Bench Top c/w Salamander Up-Stand**

# Assembly Instructions

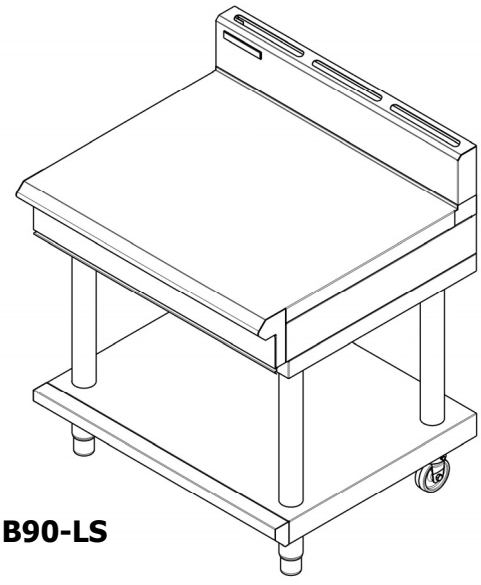

**B90-LS**

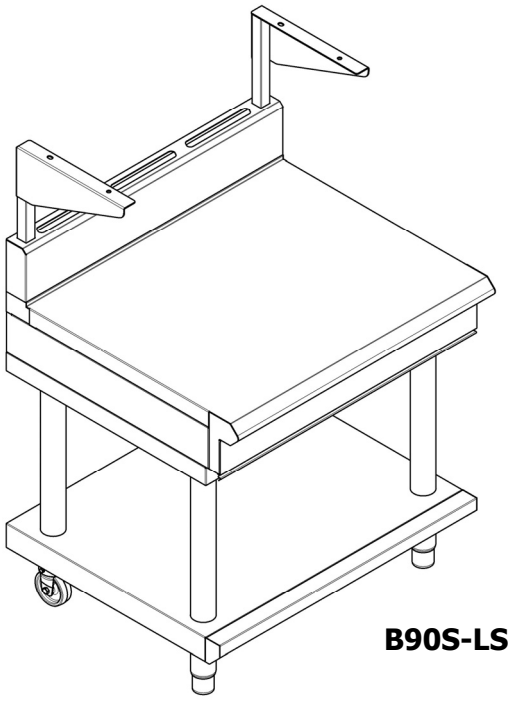

**B90S-LS**

MOFFAT®

231534-1

**Fitting the Up - Stand Assy to the Bench Top Up-Stand Models only:**

a. Remove the 6 self tapping screws from the back panel of the bench top and remove the back panel.

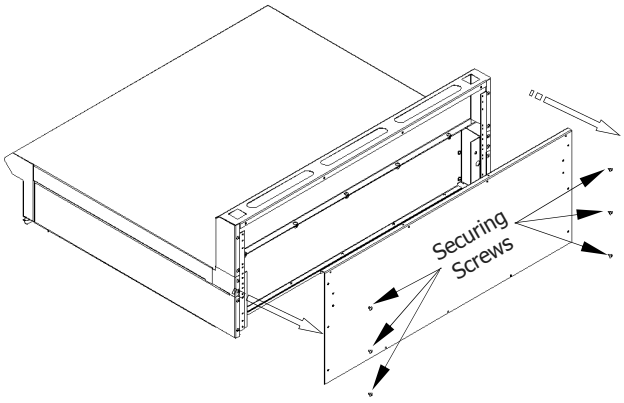


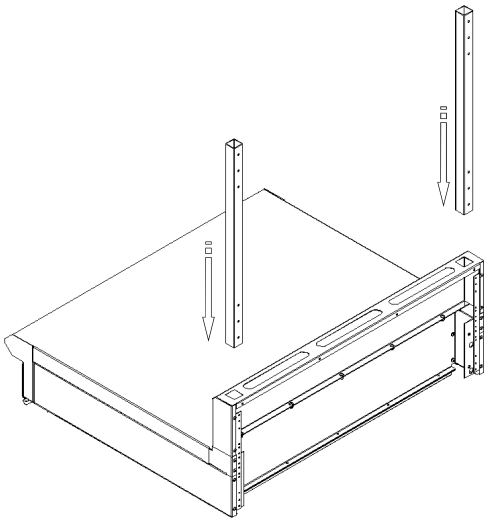

b. Fit the upstand tubes down through the cutouts in the top of the flue.

c. Secure the upstand tubes in position with tap-tight screws supplied.

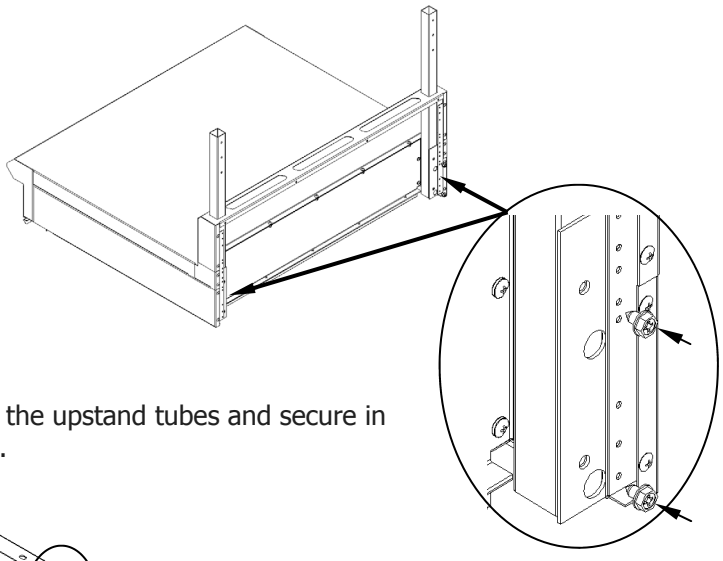

d. Fit the upstand support arms to the top of the upstand tubes and secure in position with the tap-tight screws supplied.

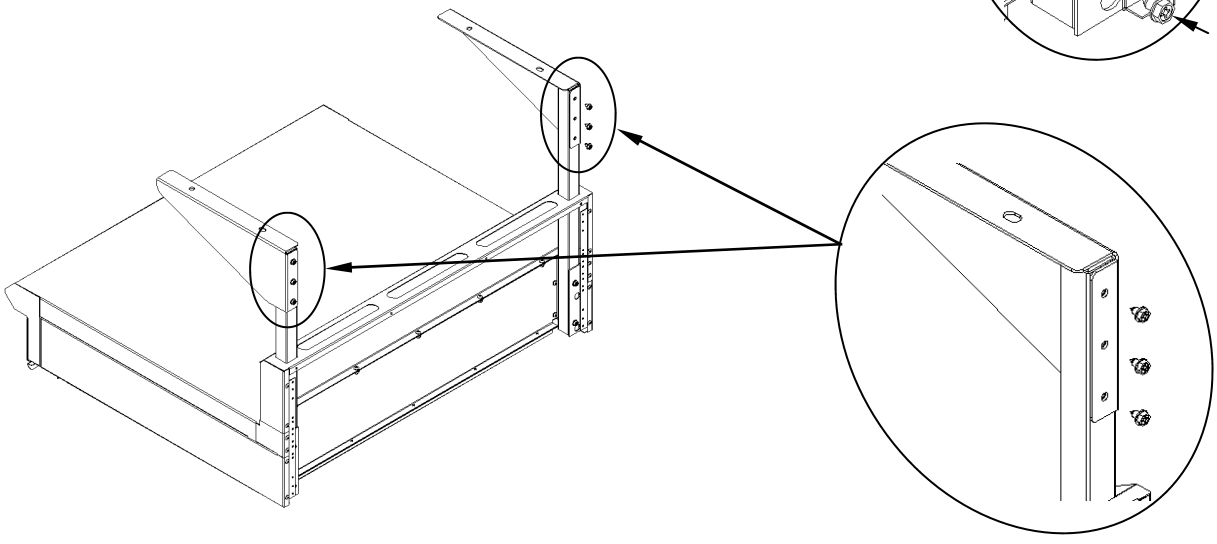



KW COMMERCIAL KITCHEN
Distributed by KW Commercial Kitchen | 1300 001 366
www.kwcommercial.com.au | sales@kwcommercial.com.au

e. Refit the back panel to the rear of the bench top and secure in place with the 6 self tapping screws.

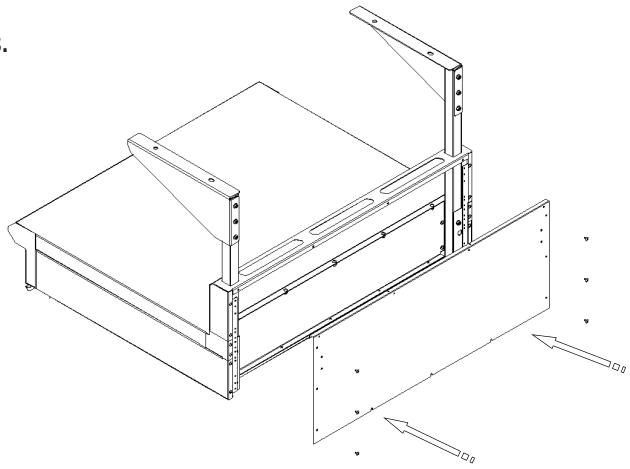

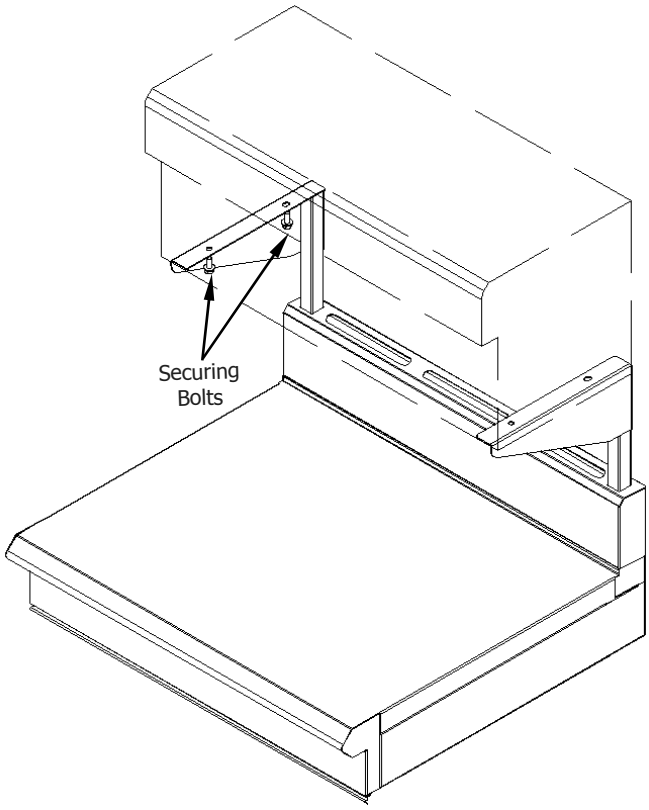


f. Remove the feet from the underside of the salamander.

g. Place the salamander on the upstand support arms and align the feet attachment holes in the underside of the salamander with the holes in the upstand support arms.

h. Secure the salamander to the support arms with the bolts supplied and tighten securely.

i. Connect up the salamander to the gas / electric supplies as shown in the 'Installation and Operation' Manual for the salamander.



KW COMMERCIAL KITCHEN
Distributed by KW Commercial Kitchen | 1300 001 366
www.kwcommercial.com.au | sales@kwcommercial.com.au

## Fitting Adjustable Feet / Rear Rollers to the Benchtop Legstand Models.

### Fitting Rear Adjustable Feet to the Legstand:-

a. Secure the rear of the base tray to the rear benchtop legs by screwing the two adjustable feet supplied, into the base of the rear benchtop legs.

b. Secure each adjustable foot, hand tight.

### Fitting Rear Rollers to the Legstand:-

a. Fit the rear leg securing bolts up through the centre of the rear leg housings to secure the rear of the base tray to the rear cooktop legs and tighten up the bolts using a 24mm socket.

b. Fit the rear rollers to the rear leg supports.

c. Secure the rear rollers to the rear leg supports using the locating screw supplied.

d. Tighten the screw using a 10mm spanner.

e. Lift the benchtop back onto its legs / rollers and refit all griddle plates, open burners, trivets and pot stands.

f. Adjust the adjustable feet to level the appliance.

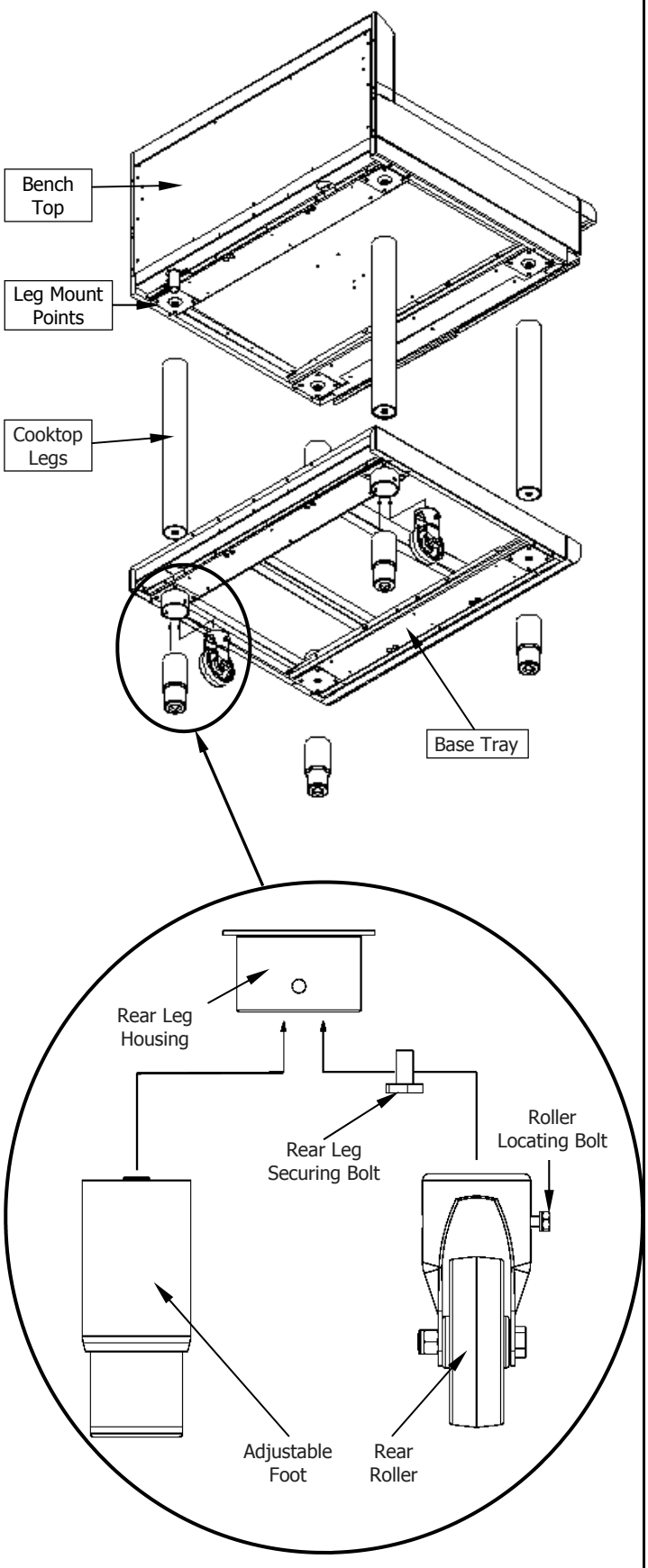




KW COMMERCIAL KITCHEN
Distributed by KW Commercial Kitchen | 1300 001 366
www.kwcommercial.com.au | sales@kwcommercial.com.au