PRODUCT DOCUMENT PACK

Prepared and distributed by KW Commercial Kitchen

PRODUCT

Blue Seal Evolution Series E516C-LS 900mm Electric Cooktop Leg Stand

Model / SKU: E516C-LS

KW COMMERCIAL KITCHEN

7/72 Canterbury Road, Bankstown NSW 2200

Phone 1300 001 366

Email sales@kwcommercial.com.au

Web www.kwcommercial.com.au

Scan for the current KW product page

DOCUMENT NOTICE

The supplier document begins on the next page. KW contact branding is added in a separate footer area and does not replace the supplier's instructions, specifications or warranty terms.

Official supplier source: https://moffat.global.ssl.fastly.net/sites/default/files/products/manual/UM_Blue%20Seal_E51%20Series_Electric%20

BLUE SEAL®

EVOLUTION SERIES

INSTALLATION AND OPERATION MANUAL

ELECTRIC COOKTOP

E512
E514
E516

Date Purchased _____

Serial Number _____

Dealer _____

_____

Service Provider _____

_____

229356-10

MANUFACTURED BY

Moffat Limited
Rolleston 7675
New Zealand

INTERNATIONAL CONTACTS

AUSTRALIA

Moffat Pty Limited

Web:	www.moffat.com.au
E.Mail:	vsales@moffat.com.au
Main Office:	(tel) +61 (03) 9518 3888
	(fax) +61 (03) 9518 3838
Service:	(tel): 1800 622 216
Spares:	(tel): 1800 337 963
Customer Service:	(tel): 1800 335 315
	(fax): 1800 350 281

CANADA

Serve Canada

Web:	www.servecanada.com
E.Mail:	info@servecanada.com
Sales:	(tel): 800 551 8795 (Toll Free)
Service:	(tel): 800 263 1455 (Toll Free)

NEW ZEALAND

Moffat Limited

Web:	www.moffat.co.nz
E.Mail:	sales@moffat.co.nz
Main Office:	(tel): 0800 663328

UNITED KINGDOM

Blue Seal

Web:	www.blue-seal.co.uk
E.Mail:	sales@blue-seal.co.uk
Sales:	(tel): +44 121 327 5575
	(fax): +44 121 327 9711
Spares:	(tel): +44 121 322 6640
	(fax): +44 121 327 9201
Service:	(tel): +44 121 322 6644
	(fax): +44 121 327 6257

UNITED STATES

Moffat

Web:	www.moffat.com
Sales:	(tel): 1-800 551 8795 (Toll Free)
	(tel): 336 661 1556
	(fax): 336 661 9546
Service:	(tel): 866 673 7937 (Toll Free)

REST OF WORLD

Moffat Limited

Web:	www.moffat.co.nz
E.Mail:	export@moffat.co.nz

The reproduction or copying of any part of this manual by any means whatsoever is strictly forbidden unless authorized previously in writing by the manufacturer.

In line with policy to continually develop and improve its products, Moffat Ltd. reserves the right to change the specifications and design without prior notice.

© Copyright Moffat Ltd. September 2019.

Blue Seal Electric Cooktop

E512	**Electric Cooktop - 300mm.**
E514	**Electric Cooktop - 600mm.**
E516	**Electric Cooktop - 900mm.**

Introduction **2**

Specification **3**
- Model Numbers Covered in this Specification
- General
- Electrical Supply Requirements
- Electrical Connection

Dimensions **5**

Installation **10**
- Installation Requirements
- Unpacking
- Location
- Clearances
- Assembly
- Fitting Adjustable Feet / Rear Rollers to Leg Stand Units
- Fitting Adjustable Feet / Rear Rollers to Cabinet and Refrigeration Bases
- Electrical Connection
- Commissioning

Operation **13**
- Operation Guide
- Radiant Hotplates
- Griddle Plates

Cleaning and Maintenance **15**
- General
- After Each Use
- Daily Cleaning
- Weekly Cleaning
- Periodic Maintenance

Fault Finding **18**

Circuit Schematics **19**

Replacement Parts List **23**

Introduction

We are confident that you will be delighted with your BLUE SEAL ELECTRIC COOKTOP, and it will become a most valued appliance in your commercial kitchen.
To ensure you receive the utmost benefit from your new Blue Seal ELECTRIC COOKTOP, there are two important things you can do.

Firstly:

Please read the instruction book carefully and follow the directions given. The time taken will be well spent.

Secondly:

If you are unsure of any aspect of the installation, instructions or performance of your appliance, contact your BLUE SEAL dealer promptly. In many cases a phone call could answer your question.

CE Only:

These instructions are only valid if the country code appears on the appliance. If the code does not appear on the appliance, refer to the supplier of this appliance to obtain the technical instructions for adapting the appliance to the conditions for use in that country.

WARNING:

IMPROPER INSTALLATION, ADJUSTMENT, ALTERATION, SERVICE OR MAINTENANCE CAN CAUSE PROPERTY DAMAGE, INJURY OR DEATH. READ THE INSTALLATION, OPERATING AND MAINTENANCE INSTRUCTIONS THOROUGHLY BEFORE INSTALLING OR SERVICING THIS APPLIANCE.

WARNING:

GREAT CARE MUST BE TAKEN BY THE OPERATOR TO USE THE EQUIPMENT SAFELY TO GUARD IT AGAINST RISK OF FIRE.

- **THE APPLIANCE MUST NOT BE LEFT ON UNATTENDED.**
- **IT IS RECOMMENDED THAT A REGULAR INSPECTION IS MADE BY A COMPETENT SERVICEMAN TO ENSURE CORRECT AND SAFE OPERATION OF YOUR APPLIANCE IS MAINTAINED.**
- **DO NOT STORE OR USE GASOLINE OR OTHER FLAMMABLE VAPOURS OR LIQUIDS IN THE VICINITY OF THIS OR ANY OTHER APPLIANCE.**
- **DO NOT SPRAY AEROSOLS IN THE VICINITY OF THIS APPLIANCE WHILE IT IS IN OPERATION.**

CAUTION:

This appliance is;

- **For professional use and is to be used by qualified persons only.**
- **Only authorised service persons are to carry out installation, servicing and conversion operations.**
- **Components having adjustments protected (e.g. paint sealed) by the manufacturer should not be adjusted by the user / operator.**
- **DO NOT operate the appliance without the legs supplied fitted.**

KW COMMERCIAL KITCHEN
Distributed by KW Commercial Kitchen | 1300 001 366
www.kwcommercial.com.au | sales@kwcommercial.com.au

Model Numbers Covered in this Specification

E512D-B	Bench Model	2 Open Radiant Elements.
E512C-B	Bench Model	300mm Griddle.
E514D-B	Bench Model	4 Open Radiant Elements.
E514D-CB	with Cabinet Base	4 Open Radiant Elements.
E514D-LS	with Leg Stand	4 Open Radiant Elements.
E514C-B	Bench Model	2 Open Radiant Elements / 300mm Griddle.
E514C-CB	with Cabinet Base	2 Open Radiant Elements / 300mm Griddle.
E514C-LS	with Leg Stand	2 Open Radiant Elements / 300mm Griddle.
E514B-B	Bench Model	600mm Griddle.
E514B-CB	with Cabinet Base	600mm Griddle.
E514B-LS	with Leg Stand	600mm Griddle.
E516D-B	Bench Model	6 Open Radiant Elements.
E516D-CB	with Cabinet Base	6 Open Radiant Elements.
E516D-LS	with Leg Stand	6 Open Radiant Elements.
E516D-RB	with Refrigeration Base	6 Open Radiant Elements.
E516C-B	Bench Model	4 Open Radiant Elements / 300mm Griddle.
E516C-CB	with Cabinet Base	4 Open Radiant Elements / 300mm Griddle.
E516C-LS	with Leg Stand	4 Open Radiant Elements / 300mm Griddle.
E516C-RB	with Refrigeration Base	4 Open Radiant Elements / 300mm Griddle.
E516B-B	Bench Model	2 Open Radiant Elements / 600mm Griddle.
E516B-CB	with Cabinet Base	2 Open Radiant Elements / 600mm Griddle.
E516B-LS	with Leg Stand	2 Open Radiant Elements / 600mm Griddle.
E516B-RB	with Refrigeration Base	2 Open Radiant Elements / 600mm Griddle.
E516A-B	Bench Model	900mm Griddle.
E516A-CB	with Cabinet Base	900mm Griddle.
E516A-LS	with Leg Stand	900mm Griddle.
E516A-RB	with Refrigeration Base	900mm Griddle.

Base Stand Options:

-B	Bench Model	(All Models).
-CB	with Cabinet Base	(E514 / E516 Models only).
-LS	with Leg Stand	(E514 / E516 Models only).
-RB	with Refrigeration Base	(E516 Models Only).

General

A commercial heavy duty, high efficiency Cooktop for modular kitchens, constructed in easy clean stainless steel external finish. Hinge-up elements and griddle sections and all services are accessed from the front of the units. It has a high option hob / griddle arrangement with 300mm, 600mm or 900mm griddle or open radiant element options.

It is available on industrial adjustable feet. With 3 models of base unit available from the E512 to E516 models. (Model E514 is not available with Refrigeration Base option and Model E512 is only available in Bench Model).

KW COMMERCIAL KITCHEN
Distributed by KW Commercial Kitchen | 1300 001 366
www.kwcommercial.com.au | sales@kwcommercial.com.au

Electrical Supply Requirements

Model	Power Supply			Total Power Input	Amps		
	Voltage	Type	Frequency		L1	L2	L3
E512D	230-240 Vac	1 P+N+E	50 / 60 Hz	4.8 kW	20.0	---	---
E512C	230-240 Vac	1 P+N+E	50 / 60 Hz	3.4 kW	14.2	---	---
E514D	400-415 Vac	2 P+N+E	50 / 60 Hz	9.6 kW	20.0	20.0	---
E514C	400-415 Vac	2 P+N+E	50 / 60 Hz	8.2 kW	14.2	20.0	---
E514B	400-415 Vac	2 P+N+E	50 / 60 Hz	6.8 kW	14.2	14.2	---
E516D	400-415 Vac	3 P+N+E	50 / 60 Hz	14.4 kW	20.0	20.0	20.0
E516C	400-415 Vac	3 P+N+E	50 / 60 Hz	13.2 kW	14.2	20.0	20.0
E516B	400-415 Vac	3 P+N+E	50 / 60 Hz	11.6 kW	14.2	14.2	20.0
E516A	400-415 Vac	3 P+N+E	50 / 60 Hz	10.2 kW	14.2	14.2	14.2

Electrical Connection

WARNING:

THIS APPLIANCE MUST BE EARTHED. IF THE SUPPLY CORD IS DAMAGED, IT MUST BE REPLACED BY A SUITABLY QUALIFIED PERSON IN ORDER TO AVOID A HAZARD.

Electrical supply connection point is located at the rear of the appliance, approximately 130mm from the right hand side and 31mm from the rear of the appliance. 85mm from bench height on bench models and 740mm from the floor on leg stand and cabinet base models. (Refer to the 'Dimensions' section).

When connecting a this electric appliance to the mains supply, ensure that the following is carried out:-

- An isolating switch is fitted within 2m of the appliance, but not on the appliance and in such a position that the user does not have to reach across the cooking surface.
- Supply cord shall be oil-resistant, sheathed flexible cable and not lighter than ordinary polychloroprene or other equivalent synthetic elastomer sheathed cord (as per AS / NZS 3191 part 2.10.11. or IEC 60245-IEC-57) e.g. HO5 RN-F Type.
- The branch supply line shall be individually overload protected to the correct current rating and the supply chord shall be protected against any mechanical or thermal damage.
- A grommet is fitted around the wiring entry hole into the appliance.
- All wiring connections must be tight.

Refer to the appropriate wiring standards for the size of cable that is to be supplied to an appliance for the current drawn on that line.

For the Refrigeration Cabinet Specifications, refer to the Refrigeration Cabinet Installation and Operation Manual supplied with the appliance.

KW COMMERCIAL KITCHEN
Distributed by KW Commercial Kitchen | 1300 001 366
www.kwcommercial.com.au | sales@kwcommercial.com.au

Dimensions for Bench Models

(R) = Rating Plate Location for this option.

E512-B

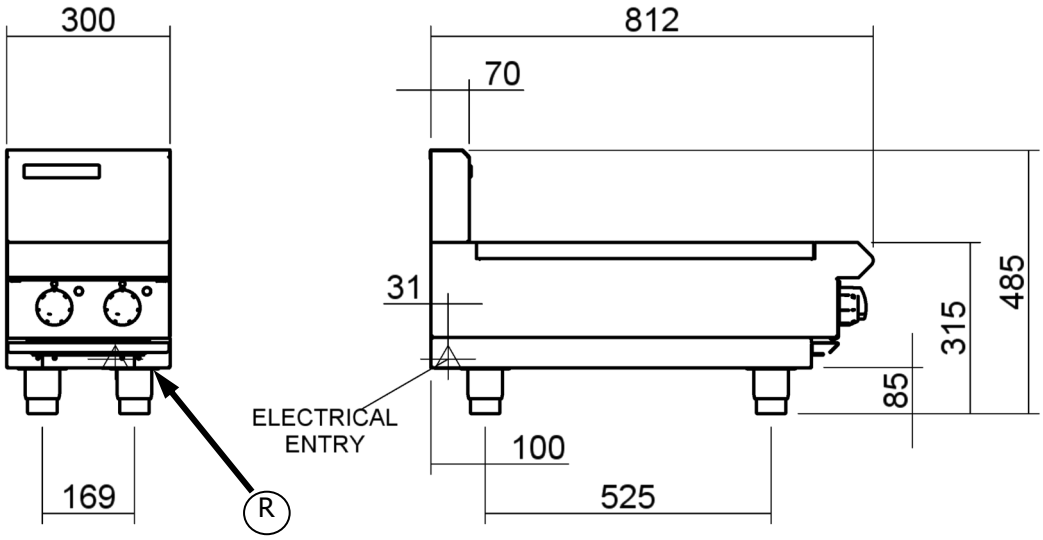

E514-B

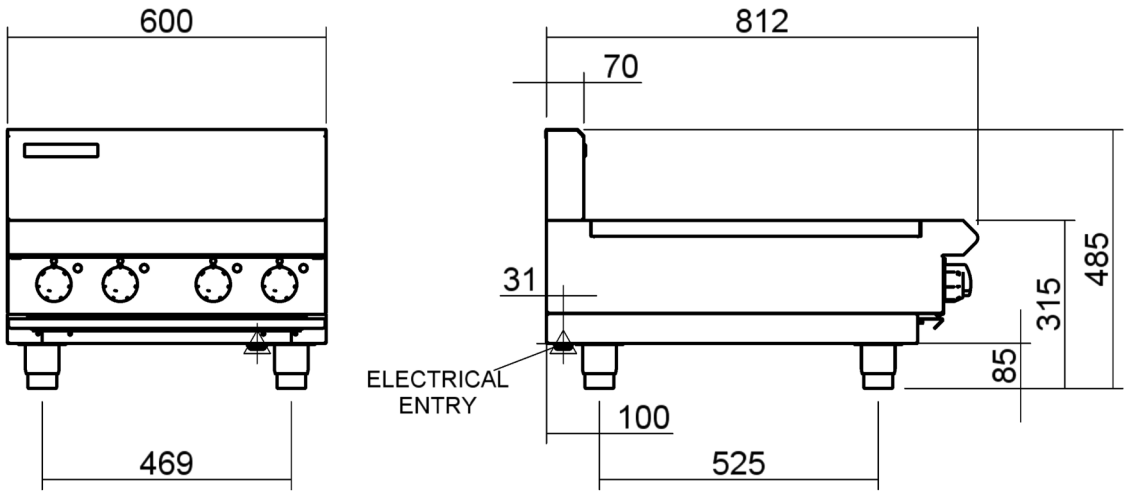

E516-B

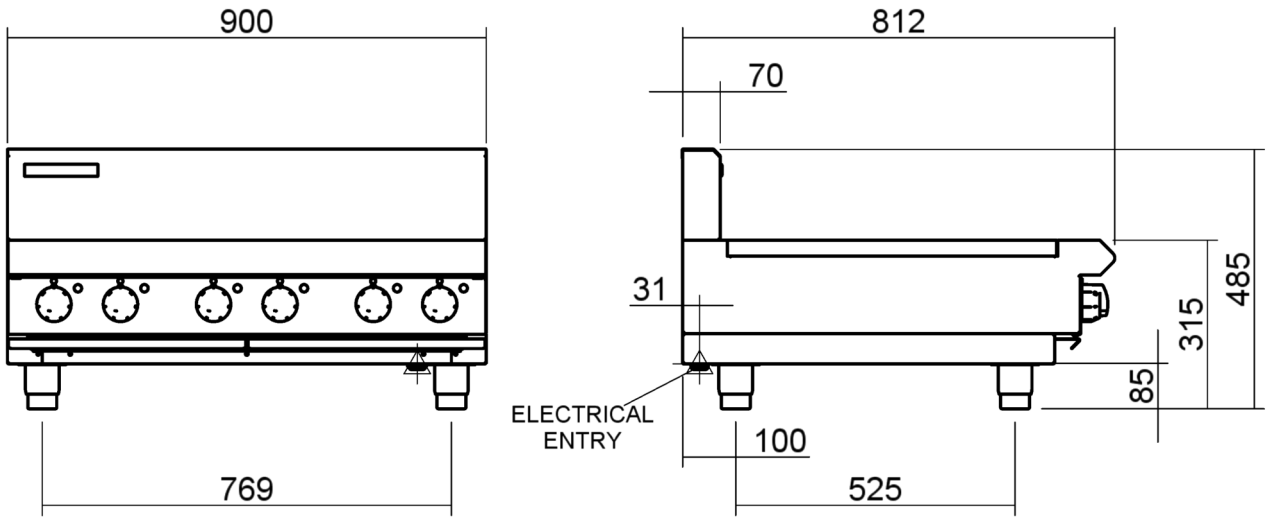

Distributed by KW Commercial Kitchen | 1300 001 366
www.kwcommercial.com.au | sales@kwcommercial.com.au

Dimensions for Cabinet Base Models

(R) = Rating Plate Location for this option.

E514-CB

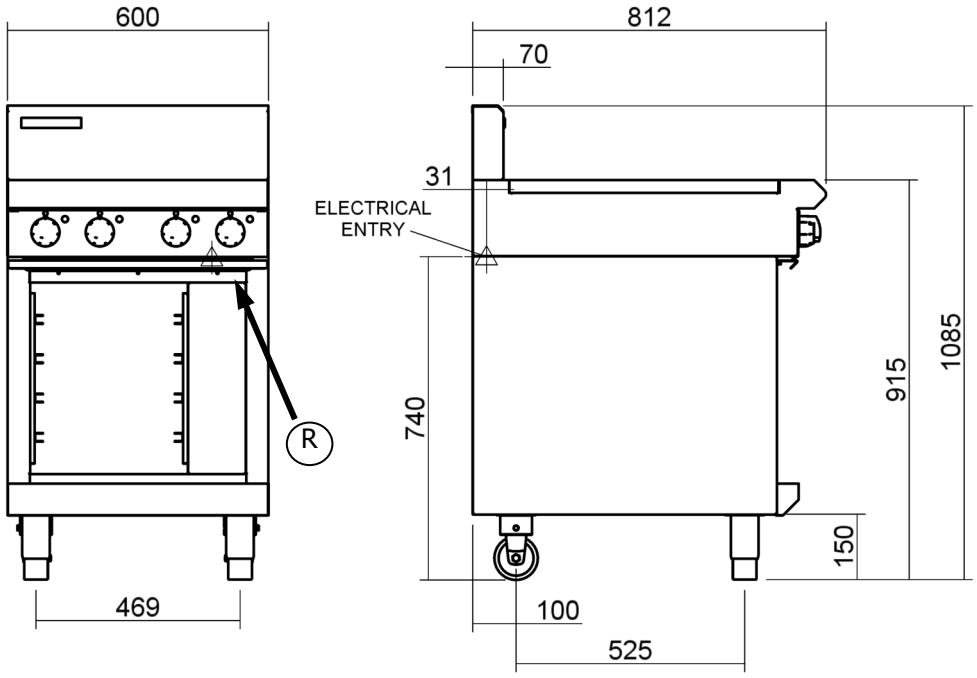

E516-CB

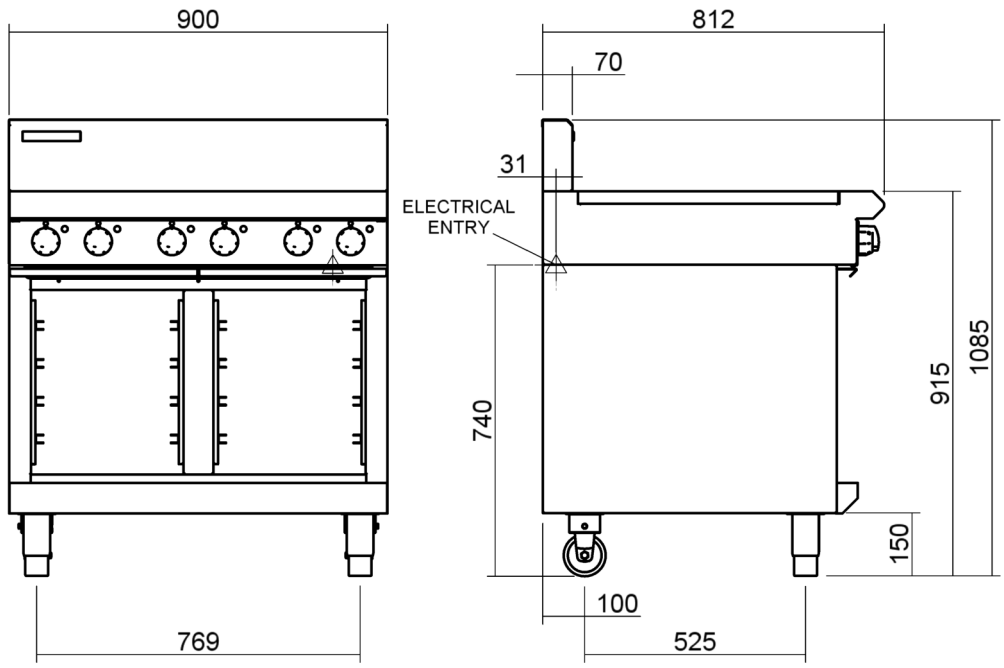

Distributed by KW Commercial Kitchen | 1300 001 366
www.kwcommercial.com.au | sales@kwcommercial.com.au

Dimensions for Leg Stand Models

(R) = Rating Plate Location for this option.

E514-LS

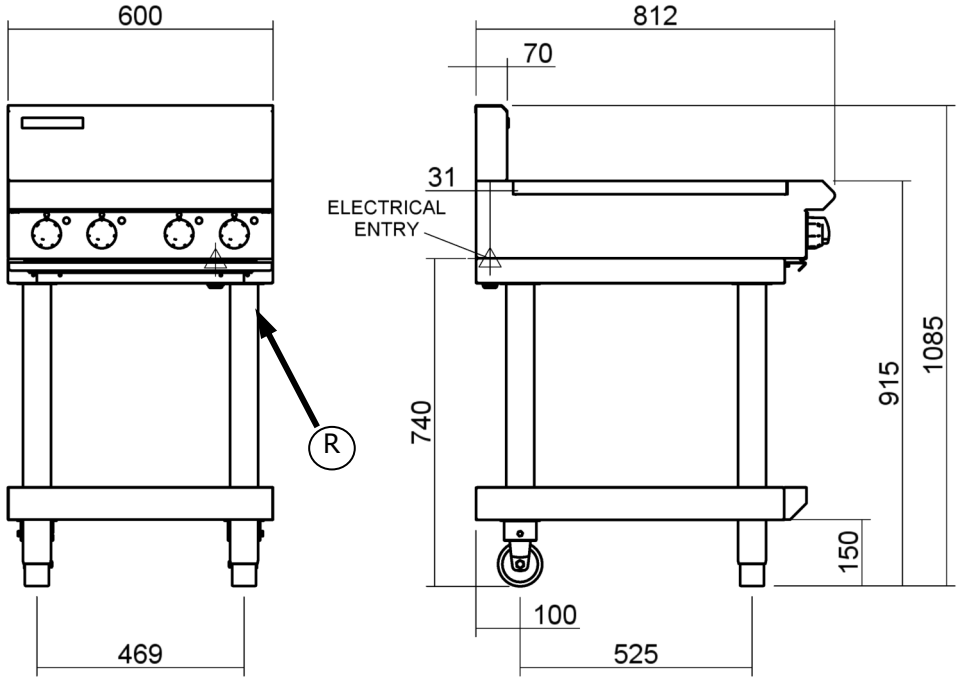

E516-LS

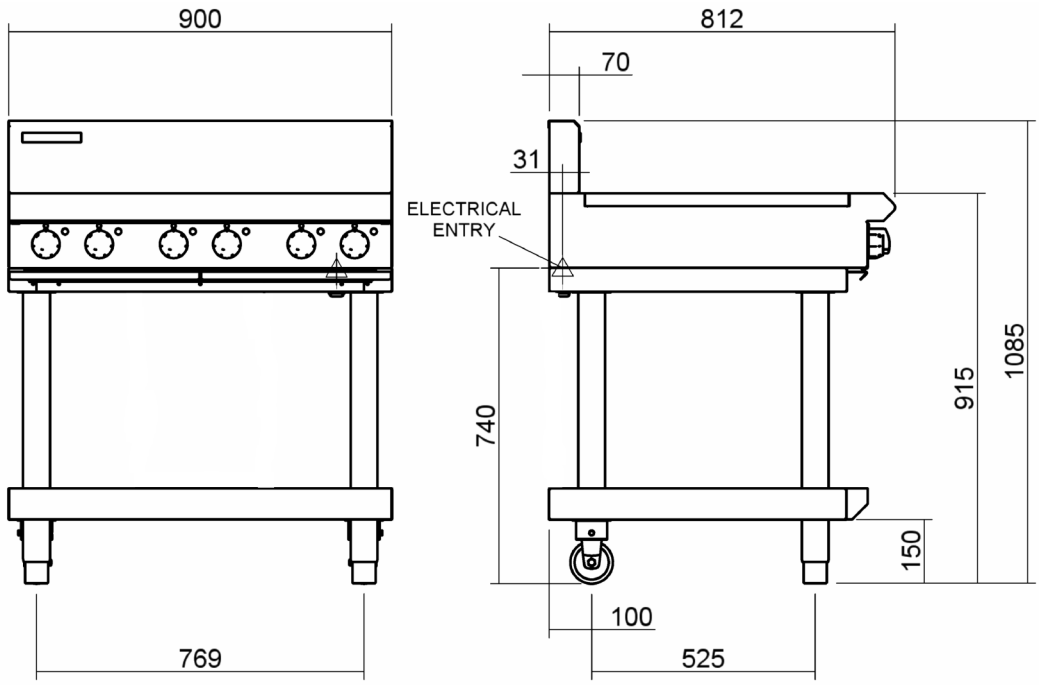

Distributed by KW Commercial Kitchen | 1300 001 366
www.kwcommercial.com.au | sales@kwcommercial.com.au

Dimensions for Refrigerated Base Models

(R) = Rating Plate Location for this option.

E516-RB

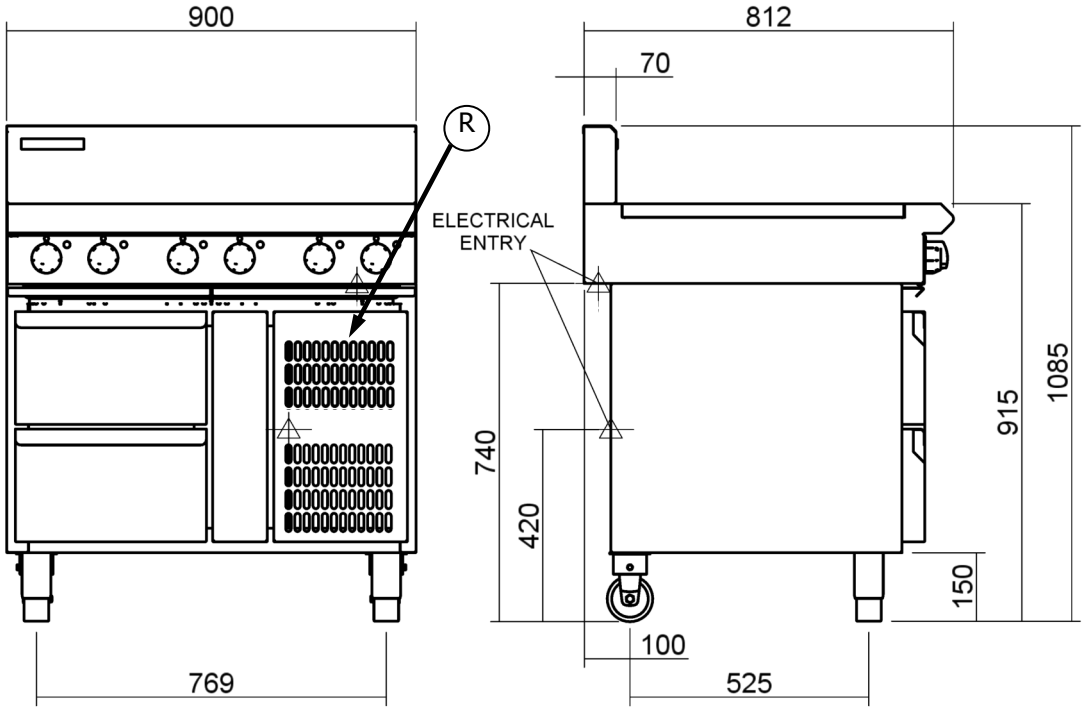

For the Refrigeration Cabinet Operation refer to the Refrigeration Cabinet Installation and Operation Manual supplied with the appliance.

Cooktop Options

E512D

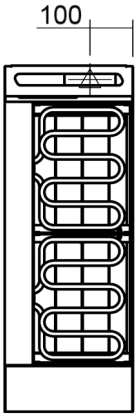

E512-C

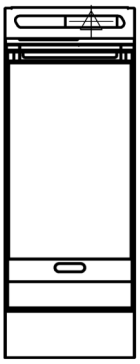

Distributed by KW Commercial Kitchen | 1300 001 366
www.kwcommercial.com.au | sales@kwcommercial.com.au

Cooktop Options

E514-D

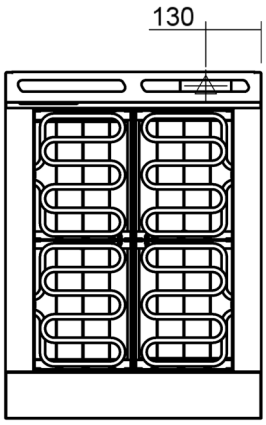

E514-C

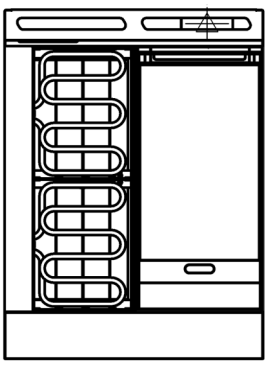

E514-B

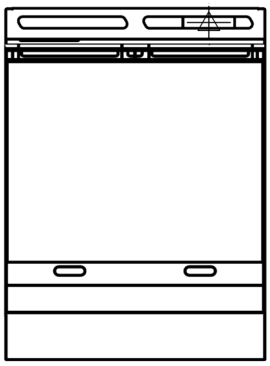

E516D

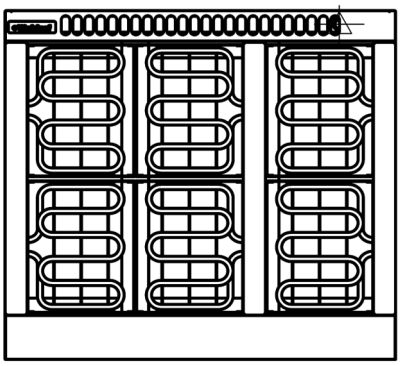

E516C

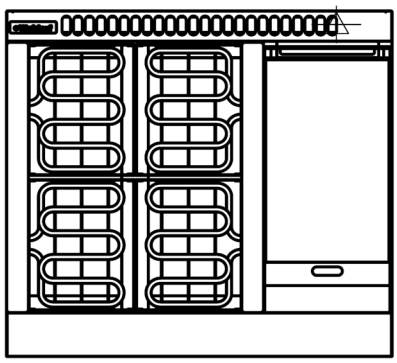

E516B

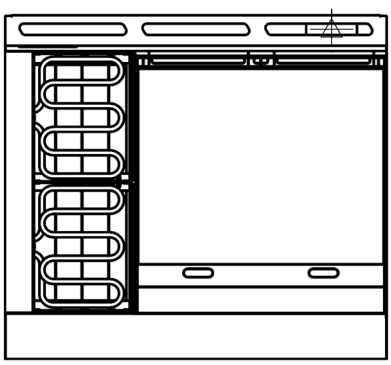

E516A

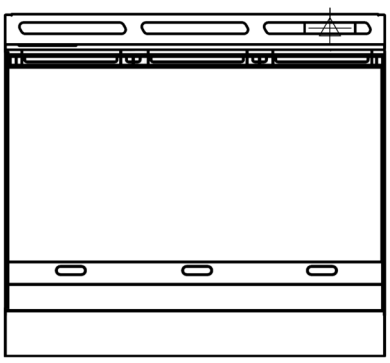

NOTE:

- **E512 is only available as Bench Mount (B) Model.**
- **E514 is available as Bench Mount (B), Cabinet Base (CB) or Leg Stand (LS) model options.**
- **E516 is available as Bench Mount (B), Cabinet Base (CB), Leg Stand (LS), or Refrigerated Base (RB) model options.**

For the Refrigeration Cabinet Dimensions, refer to the Refrigeration Cabinet Installation and Operation Manual supplied with the appliance.

KW COMMERCIAL KITCHEN
Distributed by KW Commercial Kitchen | 1300 001 366
www.kwcommercial.com.au | sales@kwcommercial.com.au

Installation Requirements

NOTE:

- **It is most important that this Electric Cooktop is installed correctly and that operation is correct before use. Installation shall comply with local electrical and health and safety requirements.**
- **This appliance shall be installed with sufficient ventilation to prevent the occurrence of unacceptable concentrations of health harmful substances in the room, the appliance is installed in.**

Blue Seal Cooktops are designed to provide years of satisfactory service, and correct installation is essential to achieve the best performance, efficiency and trouble-free operation.
This appliance must be installed in accordance with National installation codes and in addition, in accordance with relevant National / Local codes covering electrical and fire safety.

Australia / New Zealand	AS / NZS3000	- Wiring Rules.
United Kingdom:	BS 7671	- Requirements for Electrical Installations.

Installations must be carried out by authorised persons only. Failure to install equipment to the relevant codes and manufacturer's specifications shown in this section will void the warranty.

Unpacking

- Remove all packaging and transit protection from the appliance including all protective plastic coating from the exterior stainless steel panels.
- Check equipment and parts for damage. Report any damage immediately to the carrier and distributor.
- Report any deficiencies to the distributor who supplied the appliance.
- Check that the available electrical supply is correct to that shown on the Rating Plate attached to the underside of the R/H side, front Cooktop lower trim, for Bench, Cabinet Base and Leg Stand Models. For the Refrigerated Base Models the rating Plate is located inside the right hand front panel and can be viewed through the upper grille.

Location

1. Installation must include adequate clearance and ventilation.
2. Position the appliance in its approximate working position.
3. The legs must always be fitted to the base of the appliance.

Clearances

	Combustible Surface	Non Combustible Surface
Left / Right Hand Side	250mm	0mm
Rear	50mm	0mm

NOTE: Only non-combustible materials can be used in close proximity to this appliance.

KW COMMERCIAL KITCHEN
Distributed by KW Commercial Kitchen | 1300 001 366
www.kwcommercial.com.au | sales@kwcommercial.com.au

Assembly

CAUTION:

- **This appliance is for professional use and is to be used by qualified persons only.**
- **Only qualified service persons are to carry out installation and servicing of this appliance.**

Bench Mount (B) Models

1. Check that all the feet are fitted.
2. Adjust the four feet to make the hob steady and level.

Optional Accessories (Refer to Replacement Parts List)

- Plinth Kit. For installation details, refer to the instructions supplied with each kit.

Leg Stand (LS) Models Only

WARNING:

TO PREVENT EQUIPMENT DAMAGE AND RISK OF INJURY, 'SECURELY RESTRAIN' THE ELEMENTS AND GRIDDLE PLATE MODULES AND REMOVE ALL OTHER REMOVABLE ITEMS PRIOR TO FITTING THE LEG STAND.

1. Lower the appliance onto its rear face.
2. Attach the four Cooktop legs to the leg mount points on the underside of the Cooktop unit.
3. Secure each leg hand tight.
4. Align the 4 round holes in the corners of the base tray with the 4 Cooktop legs already fitted. (Ensure that the base tray is orientated with the sloping edge of the base tray facing the front of the appliance).
5. Slot the base tray onto the 4 Cooktop legs and push fully home.
6. Secure the base tray to the front cooktop legs by screwing the adjustable feet supplied, into the base of the front cooktop legs. Secure each adjustable foot, hand tight.
7. Fit the rear rollers to the rear leg ring plates and secure using the locating bolts supplied and tighten bolts using a 10mm spanner.
8. Lift the Cooktop back onto its legs.

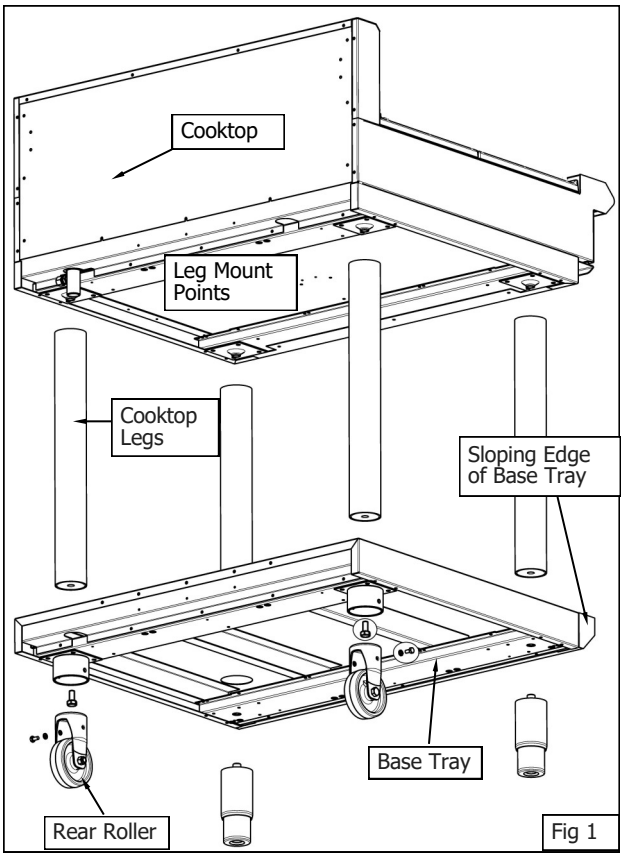

Fig 1

NOTE: This appliance is fitted with adjustable feet / rear rollers to enable the appliance to be positioned securely and level. This should be carried out on completion of the electrical connection. Refer to the 'Electrical Connection' section.

All Other Models

All other models come pre-assembled.

KW COMMERCIAL KITCHEN
Distributed by KW Commercial Kitchen | 1300 001 366
www.kwcommercial.com.au | sales@kwcommercial.com.au

Electrical Connection

WARNING:

THIS APPLIANCE MUST BE EARTHED. IF THE SUPPLY CORD IS DAMAGED, IT MUST BE REPLACED BY A SUITABLY QUALIFIED PERSON IN ORDER TO AVOID A HAZARD.

NOTE: ALL ELECTRICAL CONNECTIONS MUST ONLY BE CARRIED OUT BY AN AUTHORISED PERSON.

Each appliance should be connected to an adequately protected power supply and isolation switch mounted adjacent to, but not behind the appliance. This switch must be clearly marked and readily accessible in case of fire.

1. Check that the electricity supply is correct as shown on the Rating Plate. Refer to the 'Dimensions Section' for rating plate locations for the different model types.
2. The supply terminal connections are located at the rear of the the Cooktop. Refer to 'Electrical Connections' in the 'Specifications' section of the manual.
3. Bring the supply cable up through the compression type gland provided on the rear of the main electrical switchgear panel.
4. Connect the mains supply to L1, L2 and L3 connections as required. Refer to the 'Electrical Supply Requirements' section.
5. Connect neutral and earth conductors to neutral stud and earth stud respectively.
6. For all connections ensure that conductors are secure and appropriately terminated.
7. Tighten the cable gland to secure against tension on the cable.

NOTE:

- **This appliance must be earthed.**
- **Fixed wiring installations must incorporate an all-pole disconnection switch.**

8. Correctly locate the appliance into its final operating position and using a spirit level, adjust the legs so that the appliance is level and at the correct height.
9. Connect the power supply to the appliance.
10. Check that the electrical supply is as shown in "Specifications" section.

Commissioning

1. Before leaving the new installation;
   a. Check the following functions in accordance with the operating instructions specified in the 'Operation' section of this manual.
      - Check the current draw and loading for the equipment. Refer specification section for correct electrical requirements.
      - Check that all the connections are correct and that all cover panels have been re-fitted.
      - Check that the appliance functions in accordance with the operating instructions.
      - Ensure that this instruction manual is left with the appliance.
      - Ensure that all the relevant details and contacts have been added to the front of this manual.

   b. Ensure that the operator has been instructed in the areas of correct operation and shutdown procedure for the appliance.

2. This manual must be kept by the owner for future reference and as a record of ***Date of Purchase, Date of Installation*** and ***Serial Number of Unit*** recorded and kept with this manual. **(These details can be found on the Rating Plate attached to the inner R/H side panel. Refer to the 'Dimensions' section for rating plate location)**.

NOTE:

- **If for some reason it is not possible to get the unit to operate correctly, turn off the electrical power supply and contact a qualified service person. The supplier of this unit will be able to recommend a suitable person.**
- **Make sure that the electrical supply is turned off before any service or maintenance work is carried out.**

KW COMMERCIAL KITCHEN
Distributed by KW Commercial Kitchen | 1300 001 366
www.kwcommercial.com.au | sales@kwcommercial.com.au

Operation Guide

CAUTION:

- **This appliance is for professional use and is only to be used by qualified people.**
- **Only authorised service persons should be used to carry out installation or servicing operations.**

1. Blue Seal appliances have been designed to provide simplicity of operation.

   A commercial heavy duty, electric Cooktop is available in 3 different sizes, 300mm, 600mm and 900mm wide and in 4 model types:-

   Bench Model.
   With Cabinet Base.
   With Leg Stand.
   With Refrigerated Base.

   Can be fitted with open radiant or 300mm or 600mm griddle option depending on Cooktop size.

2. Improper operation is therefore almost impossible, however bad operation practices can reduce the life of the appliance and produce a poor quality product. To use this appliance correctly please read the following sections carefully.

   - **Radiant Hotplates.**
   - **Griddle Plate.**

(Model E516-C Shown)

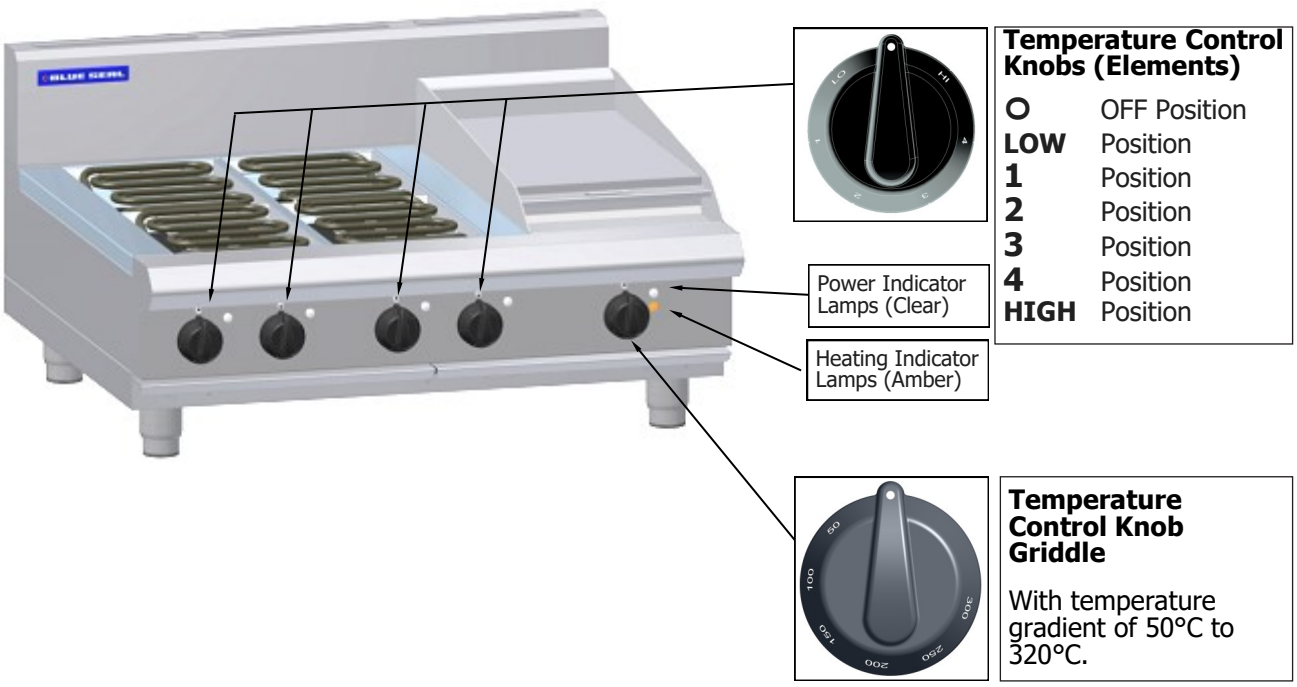

For the Refrigeration Cabinet Description of Controls, refer to the Refrigeration Cabinet Installation and Operation Manual supplied with the appliance.

KW COMMERCIAL KITCHEN
Distributed by KW Commercial Kitchen | 1300 001 366
www.kwcommercial.com.au | sales@kwcommercial.com.au

Radiant Hotplates

The controls for the radiant hotplates may be set at any position between high and low to provide the desire level of heating. An individual amber neon for each element, will glow when the element cycles on and extinguish when the element cycles off.

Start cooking at the highest setting, and change to a lower setting when the desired temperature is reached.

For maximum speed and economy, it is most important that cooking utensils should cover the hotplate completely, and have perfectly flat bases. Any part of the hotplate which glows bright red is not making effective contact with the base of the utensil, and this decreases the life and efficiency of the hotplate.

Utensils which are significantly larger than the hot plate may also reduce hotplate life and efficiency.

Griddle Plate

Turn the thermostat control knob to the desired temperature. When the amber neon goes out, the correct temperature has been reached and the griddle is ready for use.

Turning the control to a higher setting than required **will not** shorten the heat up time.

For the Refrigeration Cabinet Description of Controls, refer to the Refrigeration Cabinet Installation and Operation Manual supplied with the appliance.

KW COMMERCIAL KITCHEN
Distributed by KW Commercial Kitchen | 1300 001 366
www.kwcommercial.com.au | sales@kwcommercial.com.au

General

CAUTION:

Always turn off the electrical power supply at the mains supply before cleaning.
This appliance is not water proof.
Do not use water jet spray to clean interior or exterior of this appliance.

Clean the Cooktop regularly. A clean appliance looks better, will last longer and will perform better. Carbonised grease on the surface or on the griddle plate (If fitted) will hinder the transfer of heat from the cooking surface to the food. This will result in loss of cooking efficiency.

NOTE: Each griddle option can be supplied with a scraper tool and a pack of blades for cleaning the griddle surface. These are not supplied with the griddle and have to be purchased separately. Refer to the 'Replacement Parts List' at the rear of this manual for details.

WARNING:

THE BLADES FITTED TO THE SCRAPER TOOL ARE EXTREMELY SHARP AND ARE TO BE USED WITH CARE.

DO NOT use water on the griddle plate while this item is still hot as warping and cracking may occur. Allow the griddle plate to cool down before cleaning.

NOTE:

- **DO NOT use abrasive detergents, strong solvents or caustic detergents as they could corrode or damage the range.**
- **In order to prevent the forming of rust on the griddle plate (Steel Plate), ensure that any detergent or cleaning material has been completely removed after each cleaning. The appliance should be switched on briefly to ensure the griddle plate becomes dry. Oil or grease should be spread over the griddle surface in order to form a thin protective greasy film.**

To keep your Cooktop clean and operating at peak efficiency, follow the procedures shown below:-

After Each Use

1. Clean the Cooktop with a scraper tool to remove any food debris.

CAUTION:

Always ensure that an even pressure is applied over the whole surface of the scraper tool when using on the flat surface of the griddle, to prevent scoring of the surface.

NEVER bang the sharp edge of the scraper tool on the flat surface of the griddle as this will damage the finish and invalidate the warranty.

2. Always ensure that the scraper tool blades are changed regularly to ensure that the scraper tool works efficiently and prevents damage to the griddle plate surface.

Daily Cleaning

1. The grease drawer should be checked and emptied frequently to prevent overflow and spillage. Remove the grease drawer while still warm so that the grease is in a liquid state. Empty any grease from the drawer and wash thoroughly in the same manner as any cooking utensil.
2. Thoroughly clean the splash back, the interior and exterior surfaces of the range with hot water, a detergent solution and a soft scrubbing brush.
3. Clean the Control Panel with a damp cloth lightly moistened with a solution of mild detergent and water. Dry the control panel thoroughly with a dry cloth and polish with a soft dry cloth.
4. Brush the griddle surface (optional - if fitted) with a soft bristled brush. Any carbon deposits should be removed using the supplied scraper tool followed by wiping with a cloth moistened with a solution of mild detergent and hot water to prevent accumulation of food deposits.

KW COMMERCIAL KITCHEN
Distributed by KW Commercial Kitchen | 1300 001 366
www.kwcommercial.com.au | sales@kwcommercial.com.au

5. Brush the elements with a soft bristled brush. Any carbon deposits should be removed using a scraper tool followed by wiping with a cloth moistened in a solution of hot water and detergent to prevent accumulation of food deposits.
6. To clean under the elements, carry out the following procedure:-

   a. Lift up the element module at the front of the cooktop.

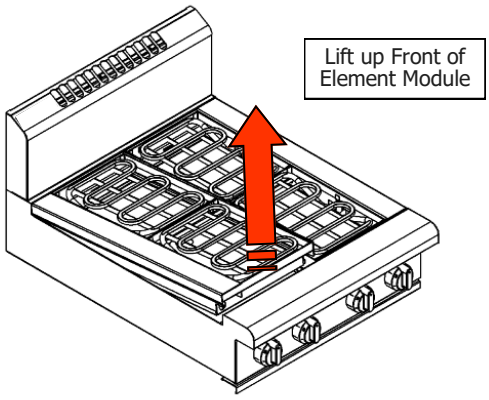

   b. Whilst holding up the front of the element module, pull the module as far forward as it will come.

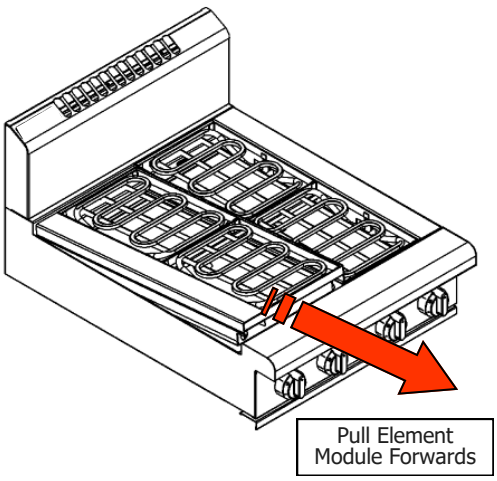

   c. Rotate the element module around the element pivot plate on whichever side of the cooktop that the pivot plate is located.

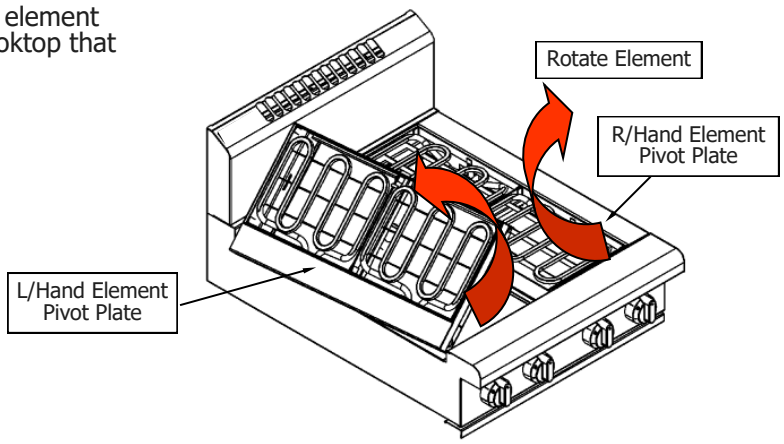

   d. Remove the drip tray from beneath the element and wash with hot water and a detergent solution. Dry with a soft dry cloth.
   e. Clean beneath the element using a cloth moistened in a solution of hot water and detergent.
   f. Refit the drip tray beneath the element ensuring that the drip tray is fitted correctly.
   g. Lower the element module back down to the cook-top frame and slide rearwards to fit back into position on the cooktop surface.

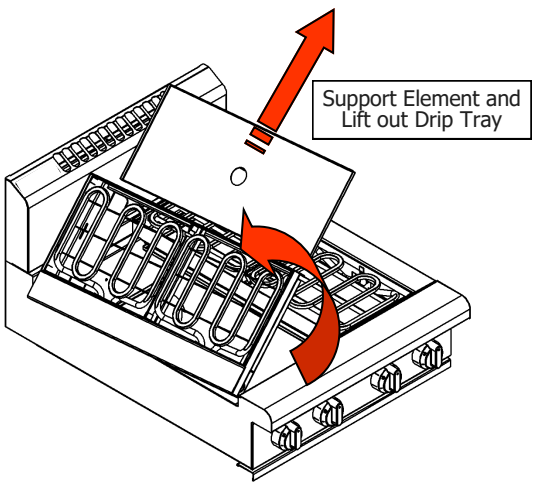

7. Dry the range thoroughly with a dry cloth and polish with a soft dry cloth.

KW COMMERCIAL KITCHEN
Distributed by KW Commercial Kitchen | 1300 001 366
www.kwcommercial.com.au | sales@kwcommercial.com.au

Weekly Cleaning

NOTE:

- **If the Cooktop usage is very high, we recommend that the weekly cleaning procedure is carried out on a more frequent basis.**
- **Ensure that protective gloves are worn during the cleaning process.**
- **DO NOT use harsh abrasive detergents, strong solvents or caustic detergents as they will damage the Cooktop and elements.**
- **DO NOT use water on the griddle plate (optional - if fitted) while it is still hot as warping may occur. Allow these items castings to cool and remove for cleaning.**

Griddle - Steel Plate (Optional - if fitted)

NOTE: In order to prevent the forming of rust on the griddle plate, ensure that all detergent and cleaning material has been entirely removed after each cleaning process. The appliance should be switched on briefly to ensure the griddle plate becomes dry. Oil or grease should be spread over the griddle surface in order to form a thin protective greasy film.

a. Remove and clean the grease collection drawer frequently to prevent over spills.
b. Clean the griddle surface thoroughly with the supplied scraper tool or a wire brush. If necessary use a griddle stone or a scotch bright pad on the griddle surface for the removal of stubborn or accumulated carbon deposits..
c. Occasionally bleach the griddle plate with vinegar when the plate is cold.
d. Clean with hot water, a mild detergent solution and a scrubbing brush. Dry all components thoroughly with a dry cloth.
e. The griddle should be switched on briefly to ensure that the griddle plate becomes dry. A thin smear of cooking oil should be spread over the griddle in order to form a protective film.

Cooktop Cooking Area

a. Clean the Cooktop area with a soft cloth and a mild detergent and hot water solution.
b. Baked on deposits or discolouration may require a good quality stainless steel cleaner or stainless steel wool. Always apply cleaner when the appliance is cold and rub in the direction of the grain.
c. Remove the grease drawer and clean with a mild anti bacterial detergent and hot water solution using a soft bristled brush. Dry the grease drawer thoroughly with a dry cloth.
d. Clean beneath the elements and the element frame drip trays as shown in 'Daily Cleaning' on the previous page.

Stainless Steel Surfaces

a. Clean the exterior surfaces of the Cooktop with hot water, a mild detergent solution and a soft scrubbing brush. Note that the control knobs are a push fit onto the control spindles and can be removed to allow cleaning of the front control panel.
b. Baked on deposits or discolouration may require a good quality stainless steel cleaner or stainless steel wool. Always apply cleaner when the appliance is cold and rub in the direction of the grain.
c. To remove any discolouration, use an approved stainless steel cleaner or stainless steel wool. Always rub in the direction of the grain.
d. Remove the grease tray and clean with a mild anti bacterial detergent and hot water solution using a soft bristled brush.
e. Dry the grease tray thoroughly with a dry cloth.
f. Dry all components thoroughly with a dry cloth and polish with a soft dry cloth.

Periodic Maintenance

To achieve the best results cleaning must be regular and thorough and all controls and mechanical parts checked and adjusted periodically by a competent serviceman. If any small faults occur, have them attended to promptly. Don't wait until they cause a complete breakdown. It is recommended that the appliance is serviced every 6 months.

For the Refrigeration Cabinet Installation refer to the Refrigeration Cabinet Installation and Operation Manual supplied with the appliance.

KW COMMERCIAL KITCHEN
Distributed by KW Commercial Kitchen | 1300 001 366
www.kwcommercial.com.au | sales@kwcommercial.com.au

Fault Finding

This section provides an easy reference guide to the more common problems that may occur during the operation of your appliance. The fault finding guide in this section is intended to help you correct, or at least accurately diagnose problems with your equipment.

Although this section covers the most common problems reported, you may encounter a problem not covered in this section. In such instances, please contact your local authorised service agent who will make every effort to help you identify and resolve the problem. Please note that the service agent will require the following information:-

- **The Model Trade Name and the Serial Number of the Appliance. (both can be found on the Technical Data Plate located on the appliance.**

Fault	Possible Cause	Remedy
Element does not work when turned 'ON'.	Check individual fuses located behind the control panel. Check for an electrical short by checking that there is NO continuity between any "phase in" line and the metal appliance body itself. Check for the item failing (element, control etc) by using a multimeter as shown on following pages.	Replace the blown fuse. Call the service provider.
Complete power failure of the appliance	Check fuse connection at the wall. Ensure that the fuse size is correct to carry the load. Check for an electrical short to the appliance.	Replace the blown fuse. Call the service provider.

For the Refrigeration Cabinet Fault Finding, refer to the Refrigeration Cabinet Installation and Operation Manual supplied with the appliance.

KW COMMERCIAL KITCHEN
Distributed by KW Commercial Kitchen | 1300 001 366
www.kwcommercial.com.au | sales@kwcommercial.com.au

E512-D

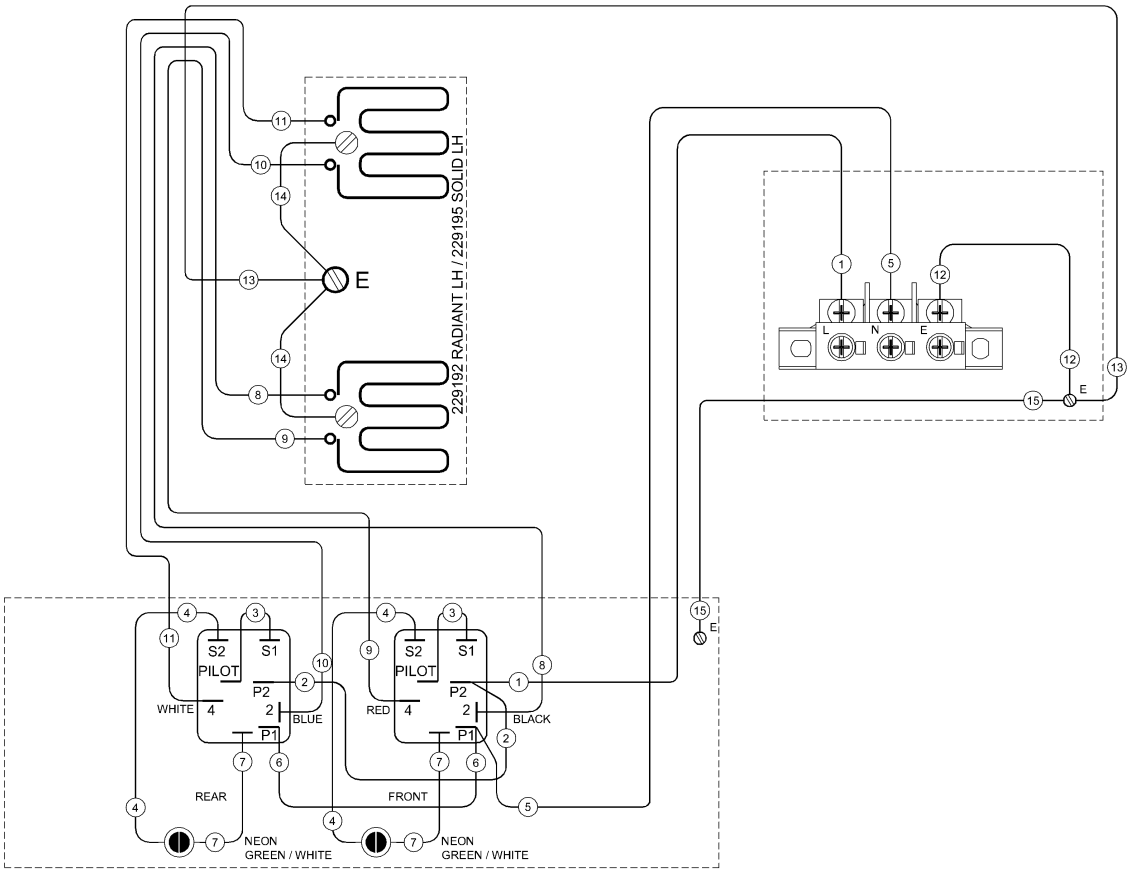

E512 C

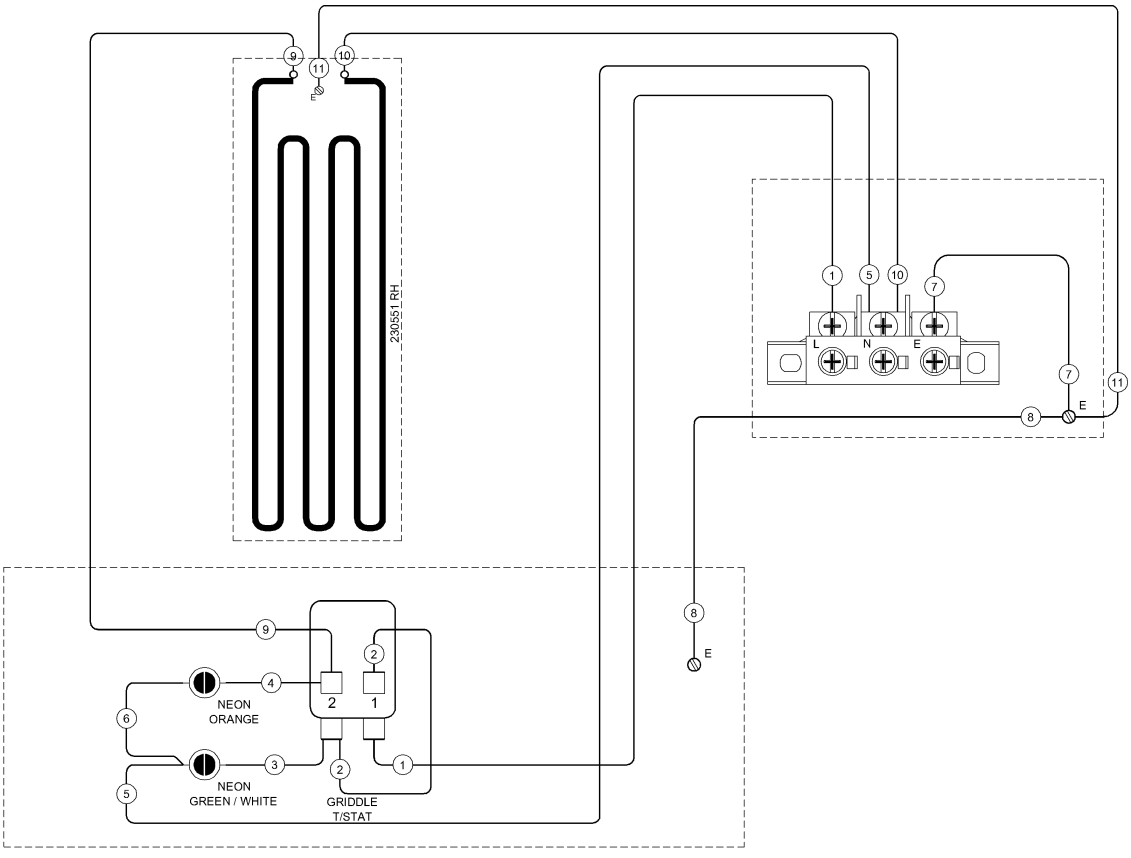

Distributed by KW Commercial Kitchen | 1300 001 366
www.kwcommercial.com.au | sales@kwcommercial.com.au

E514-D

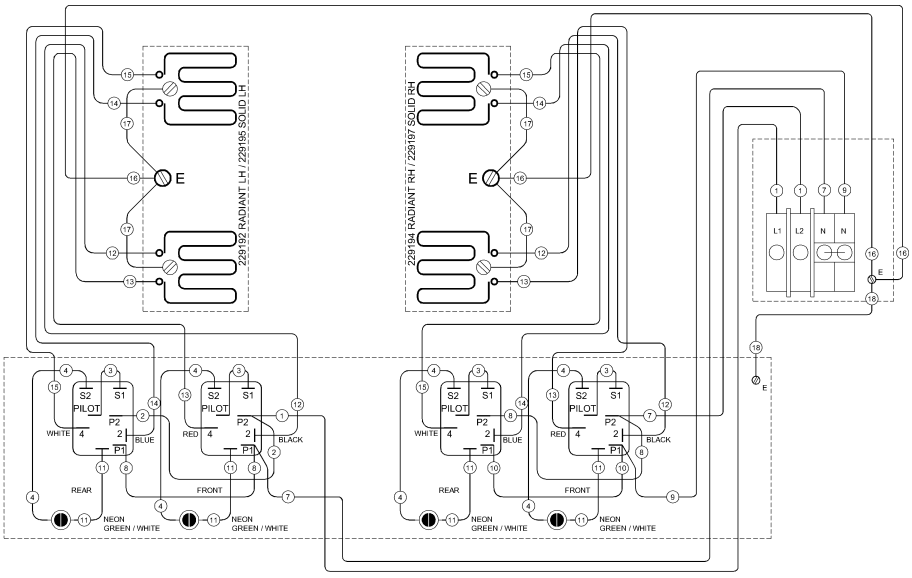

E514-C

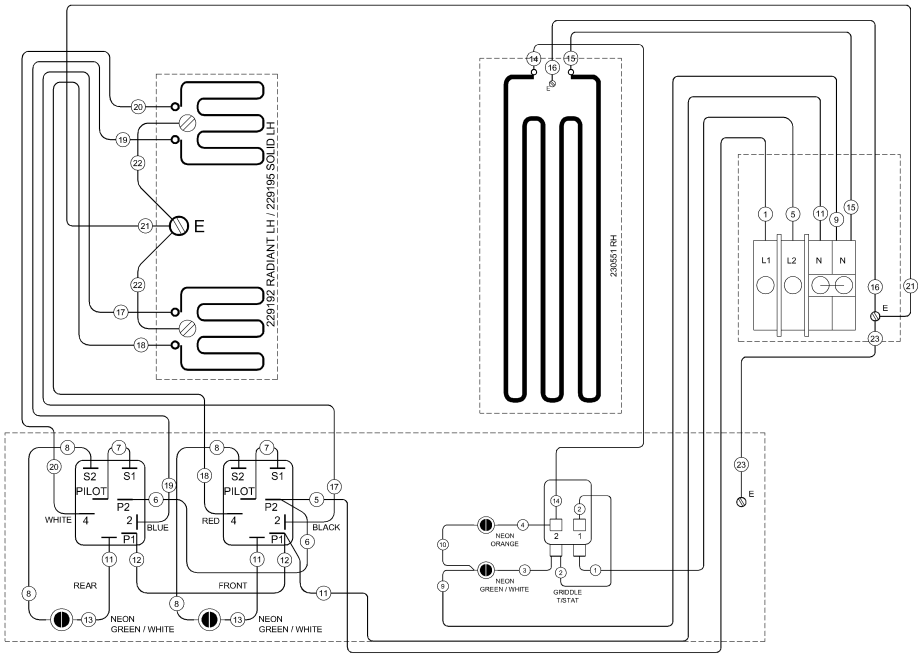

E514-B

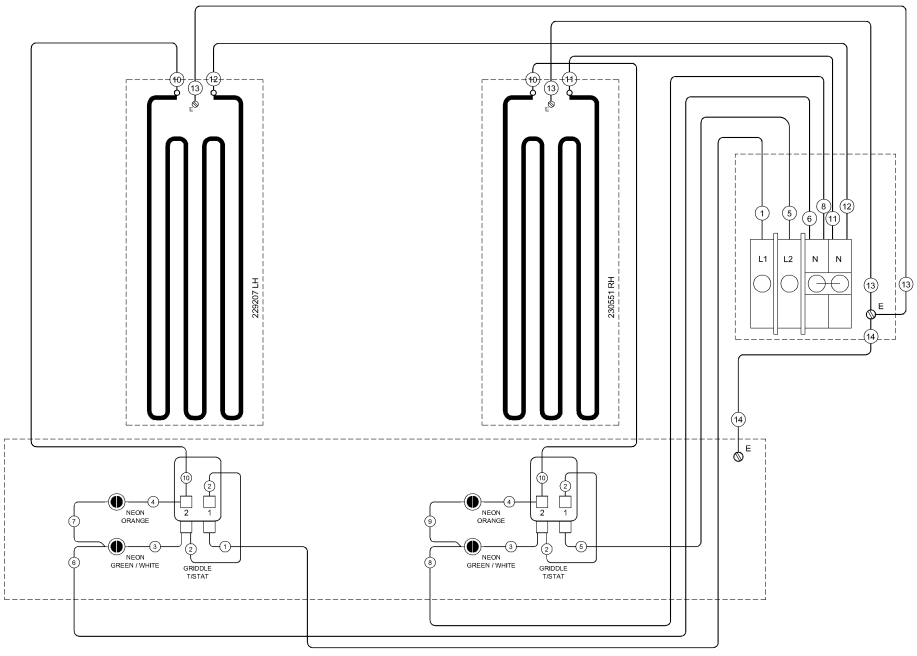

KW COMMERCIAL KITCHEN
Distributed by KW Commercial Kitchen | 1300 001 366
www.kwcommercial.com.au | sales@kwcommercial.com.au

E516-D

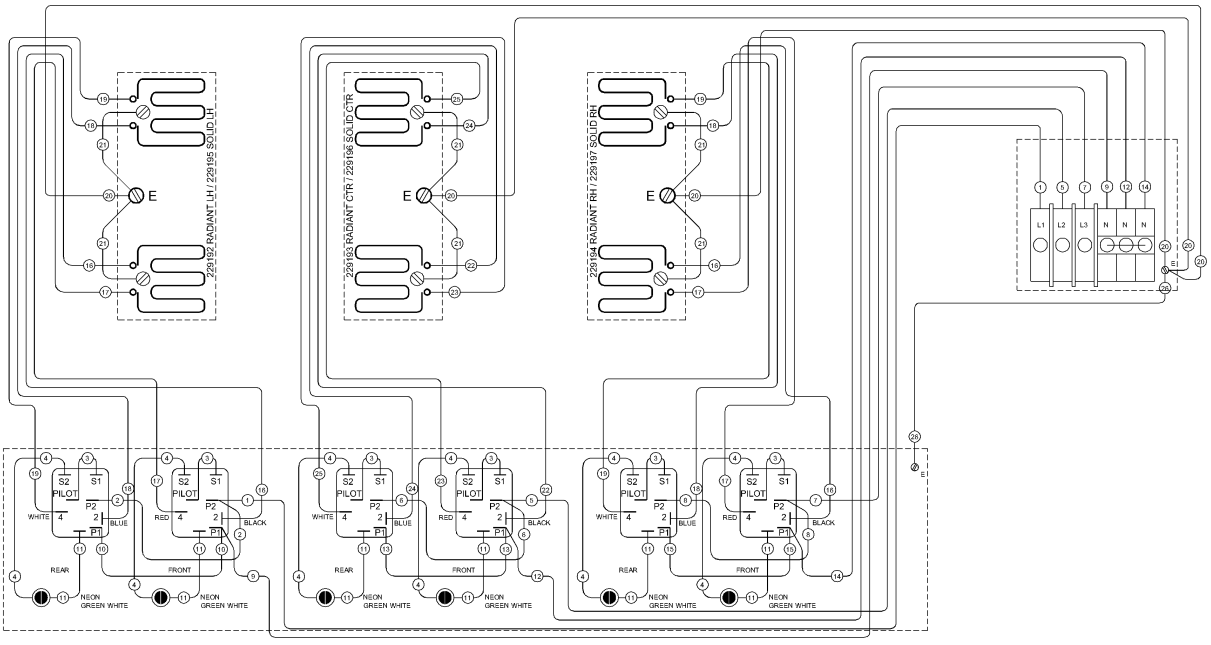

E516-C

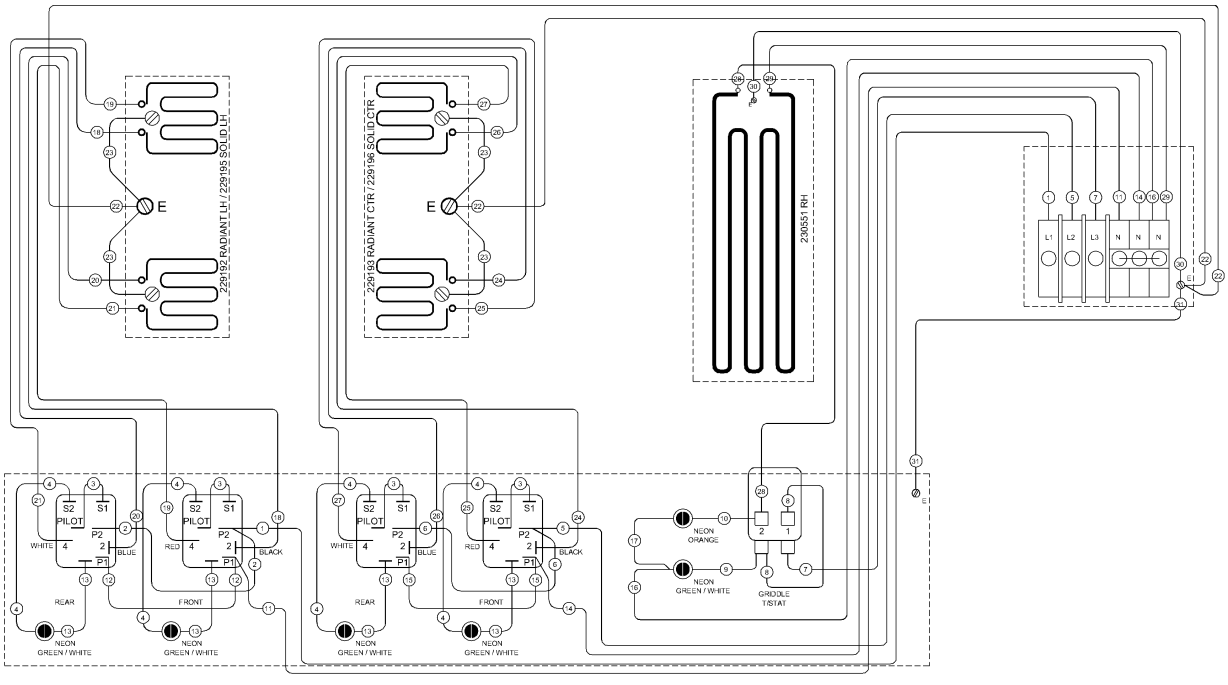

Distributed by KW Commercial Kitchen | 1300 001 366
www.kwcommercial.com.au | sales@kwcommercial.com.au

E516-B

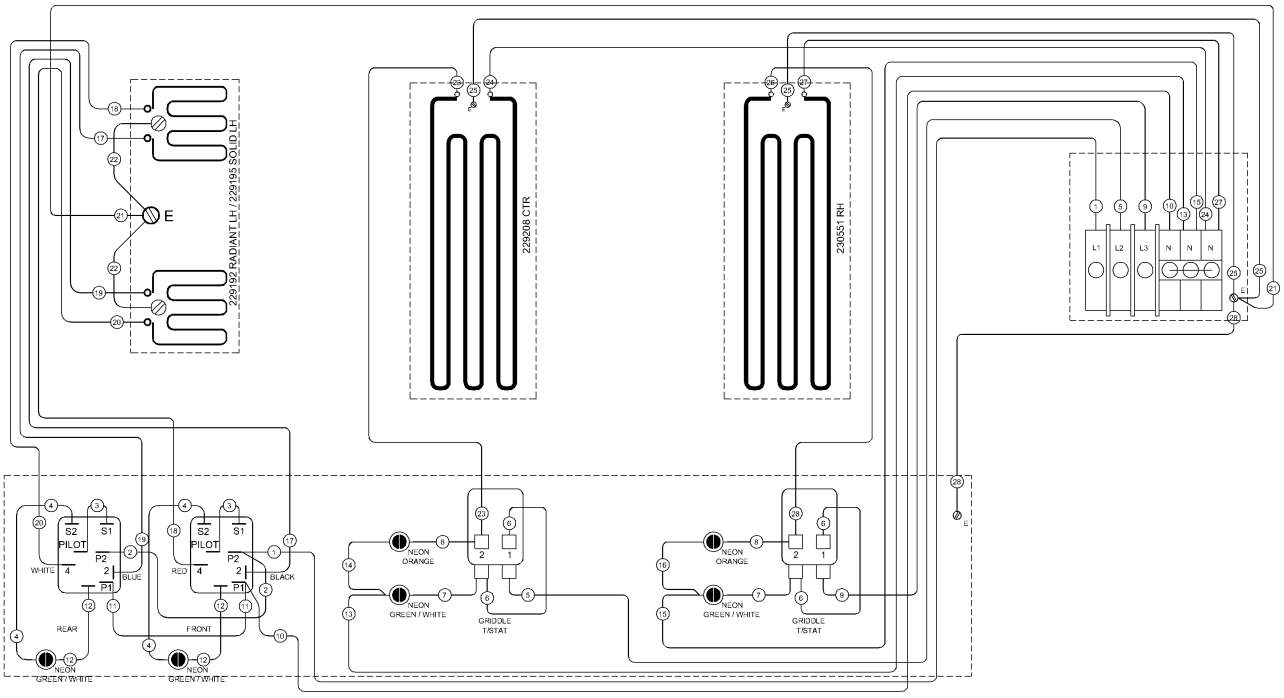

E516-A

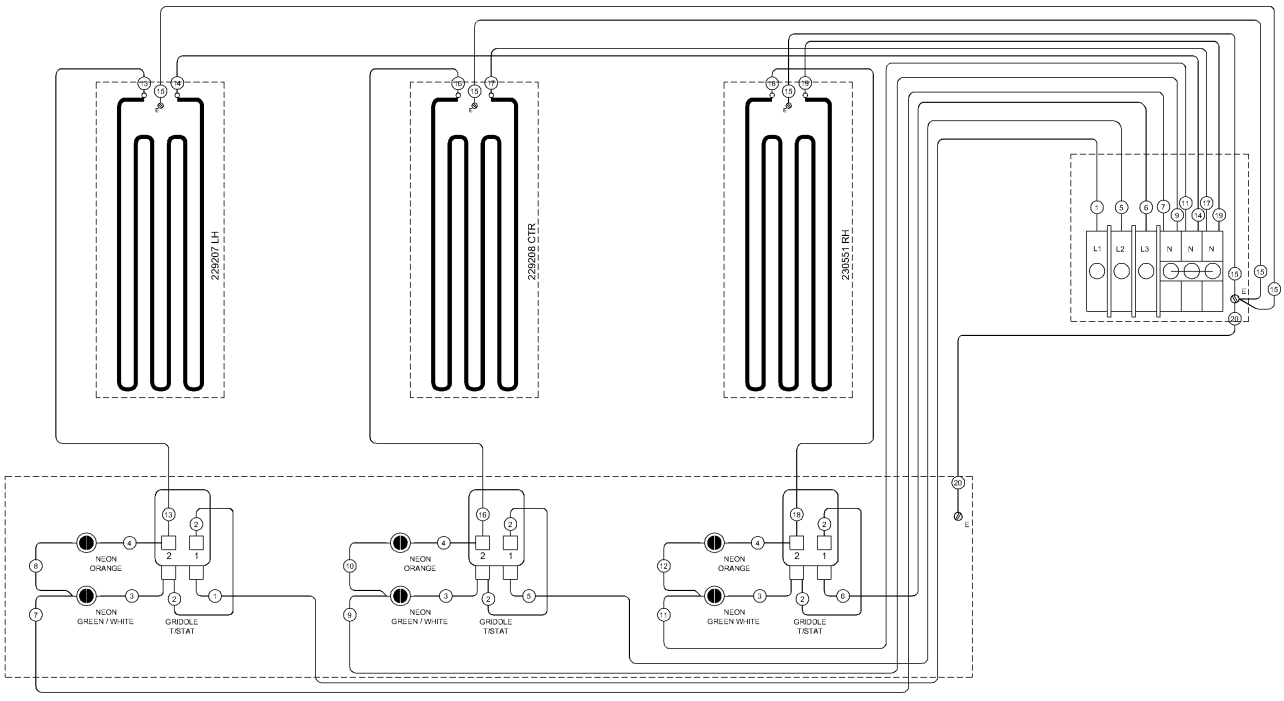

COMMERCIAL KITCHEN
Distributed by KW Commercial Kitchen | 1300 001 366
www.kwcommercial.com.au | sales@kwcommercial.com.au

Replacement Parts List

IMPORTANT:

Only genuine authorized replacement parts should be used for the servicing and repair of this appliance. The instructions supplied with the parts should be followed when replacing components.

For further information and servicing instructions, contact your nearest authorized service branch (contact details are as shown on the reverse of the front cover of this manual).

When ordering replacement parts, please quote the part number and the description as listed below. If the part required is not listed below, request the part by description and quote model number and serial number which is shown on the rating plate.

Cooktop / Griddle

234076	Element Radiant 2400W 12 x 9, 230 -240V.	
013600	Plate Element Assembly 2kW, 230 -240V.	
244031	Element Module Wire Replacement Kit.	
229022	Griddle Element 3100W, 230 -240V.	
238221	Griddle Element 3100W, 440V.	
018578	Fuse Holder	(Type SC32H).
229288	Fuse 25A	(NS25 Type gG).
227963	Neon Orange.	
228922	Neon White.	
001987	Thermostat 50 - 320°C	(Griddle only).
227391	Control Knob HI/LO.	
227392	Control Knob 50 - 320°C	(Griddle).
013989	Energy Regulator.	
229109	Griddle Plate 300mm.	
229107	Griddle Plate 600mm.	
229108	Griddle Plate 900mm.	

General

227855	Adjustable Legs	(80mm - Bench Models).
227850	Adjustable Legs	(150mm - Flush Stud All Other Models).
228288	Grease Tray	(Griddle).
229069	Element Frame Drip Tray.	
230286	Spill Tray 300mm.	
230273	Spill Tray 450mm	(Old Style).
233515	Spill Tray 900mm	(New Style).
230277	Spill Tray 600mm.	
229674	Rear Roller Assy	(Excluding Bench Mount Models).
232351	Rear Roller Assy (3”).	

Accessories

228566	Griddle Scraper Tool.	
228567	Smooth Plate Scraper Blades	(Pack of 2 Blades).
228568	Ribbed Plate Scraper Blade	(Individual Blade).
228795	600mm Plinth Kit	(LS and CB Models Only).
228799	900mm Plinth Kit	(LS and CB Models Only).
228803	1200mm Plinth Kit	(LS and CB Models Only).
228801	Refrigeration Base - 900mm Plinth Kit	(RB Models Only).
228805	Refrigeration Base - 1200mm Plinth Kit	(RB Models Only).

For the Refrigeration Cabinet Replacement Parts List, refer to the Refrigeration Cabinet Installation and Operation Manual supplied with the appliance.

KW COMMERCIAL KITCHEN
Distributed by KW Commercial Kitchen | 1300 001 366
www.kwcommercial.com.au | sales@kwcommercial.com.au