PRODUCT DOCUMENT PACK

Prepared and distributed by KW Commercial Kitchen

PRODUCT

Blue Seal Evolution Series EP514-LS 600mm Electric Griddle Leg Stand

Model / SKU: EP514-LS

KW COMMERCIAL KITCHEN

7/72 Canterbury Road, Bankstown NSW 2200

Phone 1300 001 366

Email sales@kwcommercial.com.au

Web www.kwcommercial.com.au

Scan for the current KW product page

DOCUMENT NOTICE

The supplier document begins on the next page. KW contact branding is added in a separate footer area and does not replace the supplier's instructions, specifications or warranty terms.

Official supplier source: https://moffat.global.ssl.fastly.net/sites/default/files/products/manual/229351-13.pdf

BLUE SEAL®

EVOLUTION SERIES

INSTALLATION AND OPERATION MANUAL

ELECTRIC GRIDDLE

EP513
EP514
EP516
EP518

Date Purchased

Serial Number

Dealer

Service Provider

229351-13

MANUFACTURED BY

Moffat Limited
Rolleston 7675
New Zealand

INTERNATIONAL CONTACTS

AUSTRALIA

Moffat Pty Limited

Web:	www.moffat.com.au
E.Mail:	vsales@moffat.com.au
Main Office:	(tel) +61 (03) 9518 3888
	(fax) +61 (03) 9518 3838
Service:	(tel): 1800 622 216
Spares:	(tel): 1800 337 963
Customer Service:	(tel): 1800 335 315
	(fax): 1800 350 281

CANADA

Serve Canada

Web:	www.servecanada.com
E.Mail:	info@servecanada.com
Sales:	(tel): 800 551 8795 (Toll Free)
Service:	(tel): 800 263 1455 (Toll Free)

NEW ZEALAND

Moffat Limited

Web:	www.moffat.co.nz
E.Mail:	sales@moffat.co.nz
Main Office:	(tel): 0800 663328

UNITED KINGDOM

Blue Seal

Web:	www.blue-seal.co.uk
E.Mail:	sales@blue-seal.co.uk
Sales:	(tel): +44 121 327 5575
	(fax): +44 121 327 9711
Spares:	(tel): +44 121 322 6640
	(fax): +44 121 327 9201
Service:	(tel): +44 121 322 6644
	(fax): +44 121 327 6257

UNITED STATES

Moffat

Web:	www.moffat.com
Sales:	(tel): 1-800 551 8795 (Toll Free)
	(tel): 336 661 1556
	(fax): 336 661 9546
Service:	(tel): 866 673 7937 (Toll Free)

REST OF WORLD

Moffat Limited

Web:	www.moffat.co.nz
E.Mail:	export@moffat.co.nz

The reproduction or copying of any part of this manual by any means whatsoever is strictly forbidden unless authorized previously in writing by the manufacturer.

In line with policy to continually develop and improve its products, Moffat Ltd. reserves the right to change the specifications and design without prior notice.

© Copyright Moffat Ltd. January 2025.

Blue Seal Electric Griddle

EP513	**Electric Griddle,**	**450mm.**
EP514	**Electric Griddle,**	**600mm.**
EP516	**Electric Griddle,**	**900mm.**
EP518	**Electric Griddle,**	**1200mm.**

Introduction **2**

Specifications **3**
- Model Numbers Covered in this Specification
- General
- Electrical Supply Requirements
- Electrical Connection

Dimensions **4**

Installation **9**
- Installation Requirements
- Unpacking
- Location
- Clearances
- Assembly
- Electrical Connection
- Commissioning

Operation **12**
- Operation Guide
- Description of Controls
- Griddle Operation

Cleaning and Maintenance **13**
- General
- After Each Use
- Daily Cleaning
- Weekly Cleaning
- Periodic Maintenance

Fault Finding **16**

Circuit Schematics **17**

Replacement Parts List **20**

Introduction

We are confident that you will be delighted with your BLUE SEAL ELECTRIC GRIDDLE, and it will become a most valued appliance in your commercial kitchen.

To ensure you receive the utmost benefit from your new BLUE SEAL Appliance, there are two important things you can do.

Firstly:

Please read the instruction book carefully and follow the directions given. The time taken will be well spent.

Secondly:

If you are unsure of any aspect of the installation, instructions or performance of your appliance, contact your BLUE SEAL dealer promptly. In many cases a phone call could answer your question.

CE Only:

These instructions are only valid if the country code appears on the appliance. If the code does not appear on the appliance, refer to the supplier of this appliance to obtain the technical instructions for adapting the appliance to the conditions for use in that country.

Recognise safety information:

Safety alert symbol.
When you see this symbol in the manual or on the appliance, pay special attention to the instructions.

Read the instructions before using this appliance.

Risk of electric shock.

WARNING:

IMPROPER INSTALLATION, ADJUSTMENT, ALTERATION, SERVICE OR MAINTENANCE CAN CAUSE PROPERTY DAMAGE, INJURY OR DEATH. READ THE INSTALLATION, OPERATING AND MAINTENANCE INSTRUCTIONS THOROUGHLY BEFORE INSTALLING OR SERVICING THIS APPLIANCE.

WARNING:

GREAT CARE MUST BE TAKEN BY THE OPERATOR TO USE THE EQUIPMENT SAFELY TO GUARD IT AGAINST RISK OF FIRE.

- **THE APPLIANCE MUST NOT BE LEFT ON UNATTENDED.**
- **IT IS RECOMMENDED THAT A REGULAR INSPECTION IS MADE BY A COMPETENT SERVICEMAN TO ENSURE CORRECT AND SAFE OPERATION OF YOUR APPLIANCE IS MAINTAINED.**
- **DO NOT STORE OR USE GASOLINE OR OTHER FLAMMABLE VAPOURS OR LIQUIDS IN THE VICINITY OF THIS OR ANY OTHER APPLIANCE.**
- **DO NOT SPRAY AEROSOLS IN THE VICINITY OF THIS APPLIANCE WHILE IT IS IN OPERATION.**
- **DO NOT USE WATER JET, SPRAY, OR STEAM CLEANER TO CLEAN THIS APPLIANCE.**

CAUTION:

This appliance is;

- **Intended for commercial use only, in kitchens of restaurants, canteens, and so on. This appliance is not intended for use in continuous mass production of food.**
- **For professional use and is only to be used by suitably qualified / trained persons.**
- **Only qualified service persons are to carry out installation, servicing and gas conversion operations.**
- **Components having adjustments protected (e.g. paint sealed) by the manufacturer should not be adjusted by the user / operator.**
- **DO NOT operate the appliance without the legs supplied fitted.**

KW COMMERCIAL KITCHEN
Distributed by KW Commercial Kitchen | 1300 001 366
www.kwcommercial.com.au | sales@kwcommercial.com.au

Model Numbers Covered in this Specification

Model Number	Model Type
EP513 - B	450 mm Bench Model
EP513 - LS	450 mm Leg Stand Model
EP514 - B	600 mm Bench Model
EP514 - CB	600 mm with Cabinet
EP514 - LS	600 mm Leg Stand Model
EP516 - B	900 mm Bench Model
EP516 - CB	900 mm with Cabinet
EP516 - LS	900 mm Leg Stand Model
EP516 - RB	900 mm with Refrigeration Base
EP518 - B	1200 mm Bench Model
EP518 - CB	1200 mm with Cabinet
EP518 - LS	1200 mm Leg Stand Model
EP518 - RB	1200 mm with Refrigeration Base

Electrical Supply Requirements

Model	Electrical Supply			Nominal Rating				
	Voltage	Power	Frequency	Power Input	Current (A)			Voltage
					L1	L2	L3	
EP513	230-240 Vac	1P+N+E	50 / 60 Hz	6.0 kW	25	—	—	240 Vac
EP514	230-240 Vac	1P+N+E	50 / 60 Hz	7.2 kW	30	—	—	240 Vac
EP516	400-415 Vac	3 P+N+E	50 / 60 Hz	12.0 kW	16.4	16.4	16.4	415 Vac
EP518	400-415 Vac	3 P+N+E	50 / 60 Hz	18.0 kW	24.5	24.5	24.5	415 Vac

Electrical Connection

Warning

THIS APPLIANCE MUST BE EARTHED. IF SUPPLY CORD IS DAMAGED, IT MUST BE REPLACED BY A SUITABLY QUALIFIED PERSON IN ORDER TO AVOID A HAZARD.

When connecting a Blue Seal electric appliance to the mains supply, ensure that the following is carried out:-

- An isolating switch is fitted within 2 m of the appliance, but not on the appliance and in such a position that the user does not have to reach across the cooking surface.
- Supply cord shall be oil-resistant, sheathed flexible cable and not lighter than ordinary polychloroprene or other equivalent synthetic elastomer sheathed cord (as per AS / NZS 3191 part 2.10.11. or IEC 60245-IEC-57) e.g. H05 RN-F Type.
- The branch supply line shall be individually overload protected to the correct current rating and the supply chord shall be protected against any mechanical or thermal damage.
- A grommet is fitted around the wiring entry hole into the appliance.
- All wiring connections must be tight.
- If the appliance is intended to be moved for cleaning, then it shall be installed with flexible power supply and equipotential bonding connections, such that the appliance can be moved forward not less than 1320 mm without the flexible connections becoming taut or strained.
- A residual-current device (RCD) is recommended for protection of the power supply to this appliance.

Refer to the appropriate wiring standards for the size of cable that is to be supplied to an appliance for the current drawn on that line.

For the Refrigeration Cabinet Specifications refer to the Refrigeration Cabinet Installation and Operation Manual supplied with the appliance.

KW COMMERCIAL KITCHEN
Distributed by KW Commercial Kitchen | 1300 001 366
www.kwcommercial.com.au | sales@kwcommercial.com.au

Dimensions for Bench Models

EP513 - B

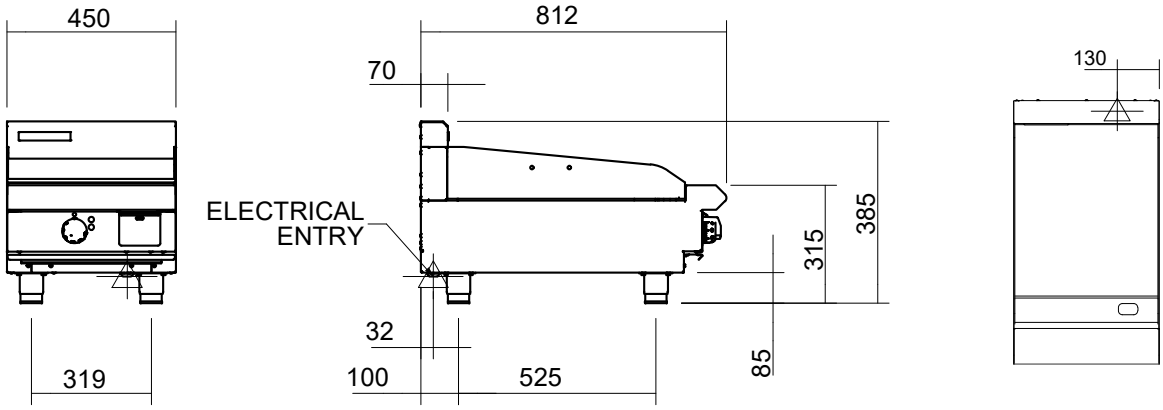

EP514 - B

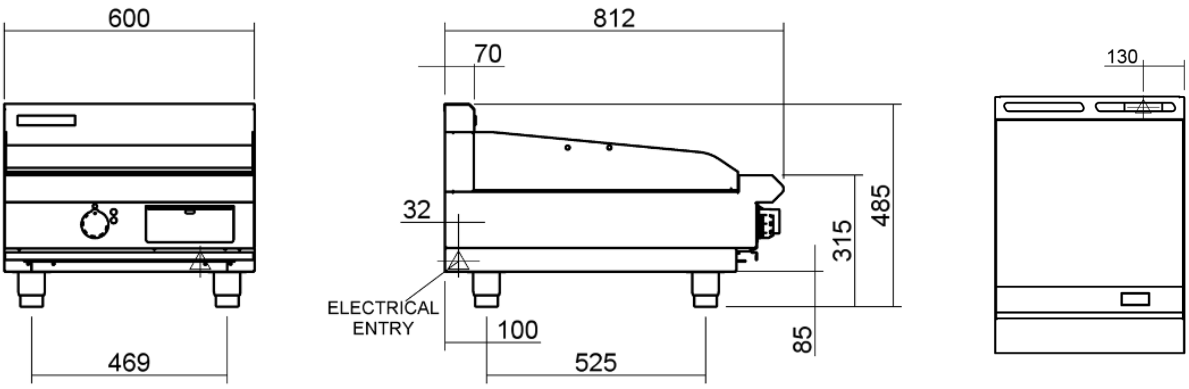

EP516 - B

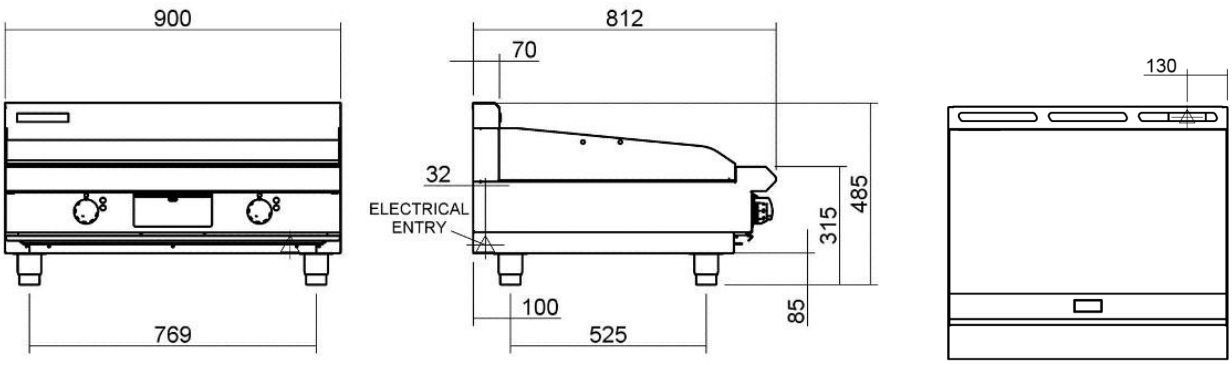

EP518 - B

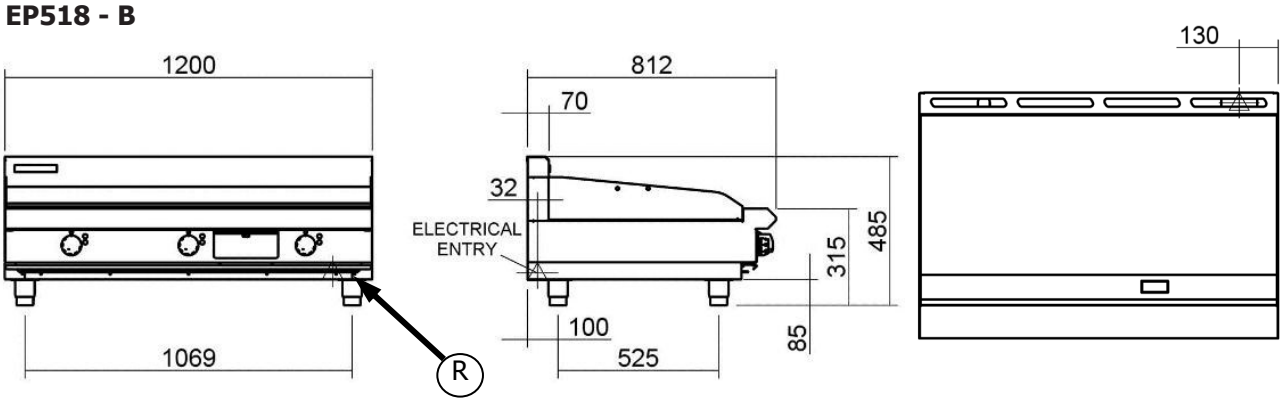

R = Rating Plate Location for this option.

= ELECTRICAL CONNECTION POINT.

KW COMMERCIAL KITCHEN
Distributed by KW Commercial Kitchen | 1300 001 366
www.kwcommercial.com.au | sales@kwcommercial.com.au

Dimensions for Cabinet Base Models

EP514 - CB

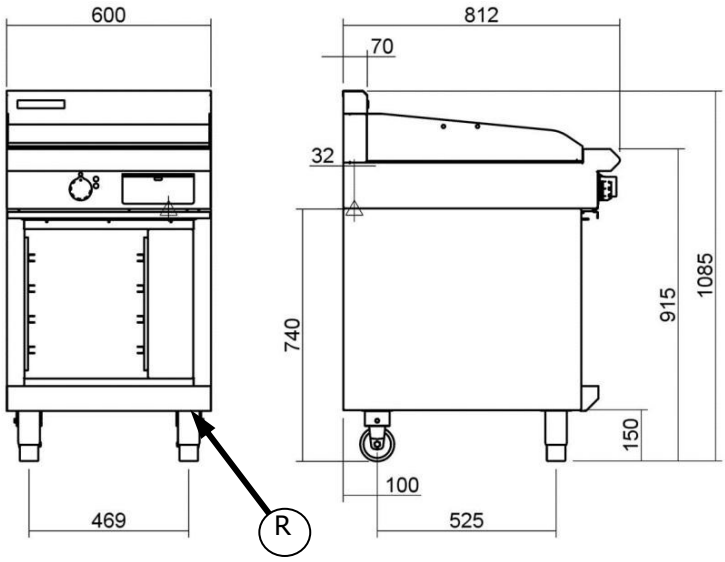

R = Rating Plate Location for this option.

EP516 - CB

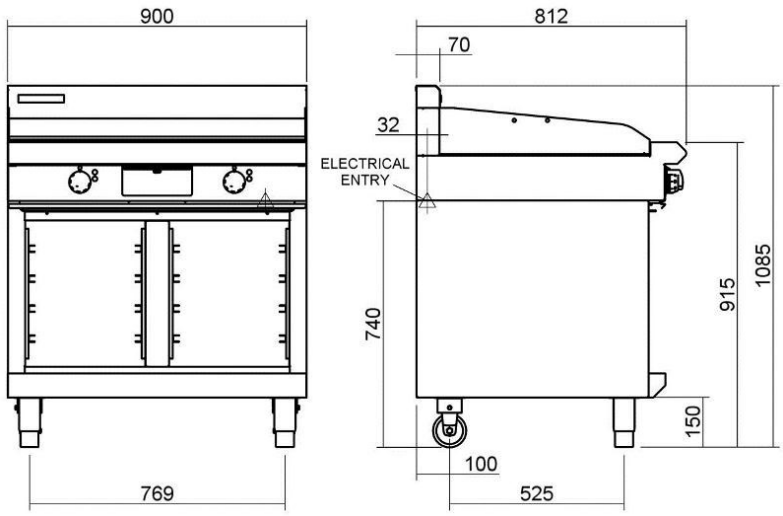

EP518 - CB

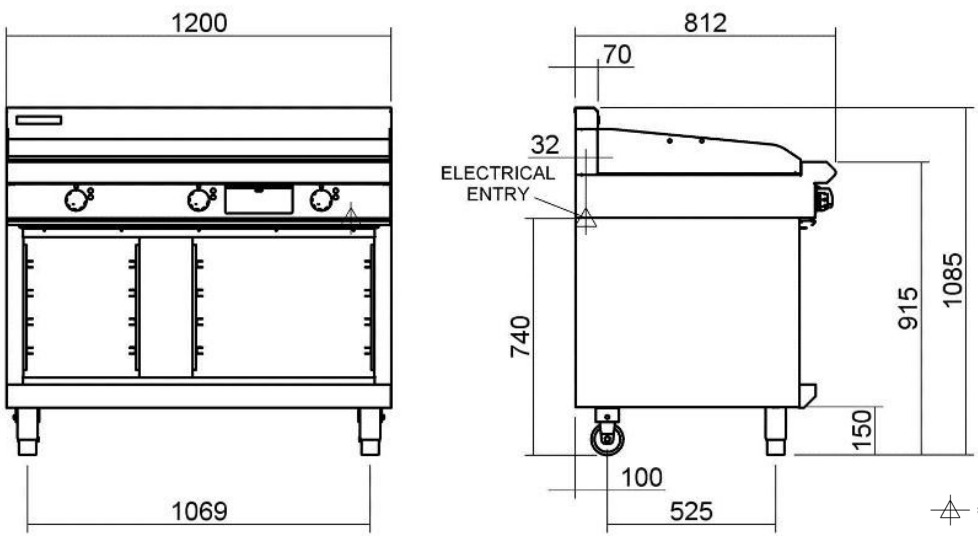

= ELECTRICAL CONNECTION POINT.

Distributed by KW Commercial Kitchen | 1300 001 366
www.kwcommercial.com.au | sales@kwcommercial.com.au

Dimensions for Leg Stand Models

EP513 - LS

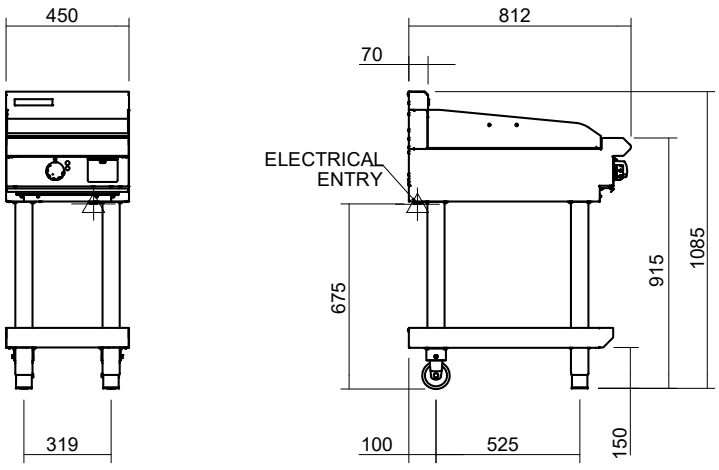

EP514 - LS

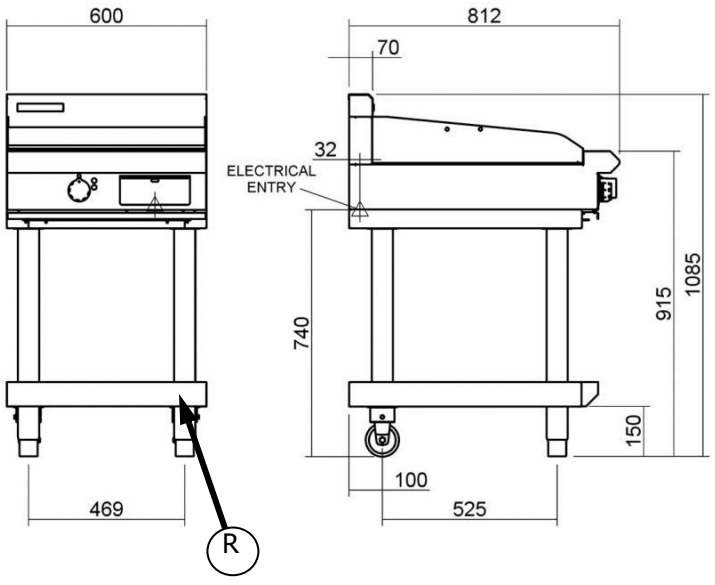

R = Rating Plate Location for this option.

EP516 - LS

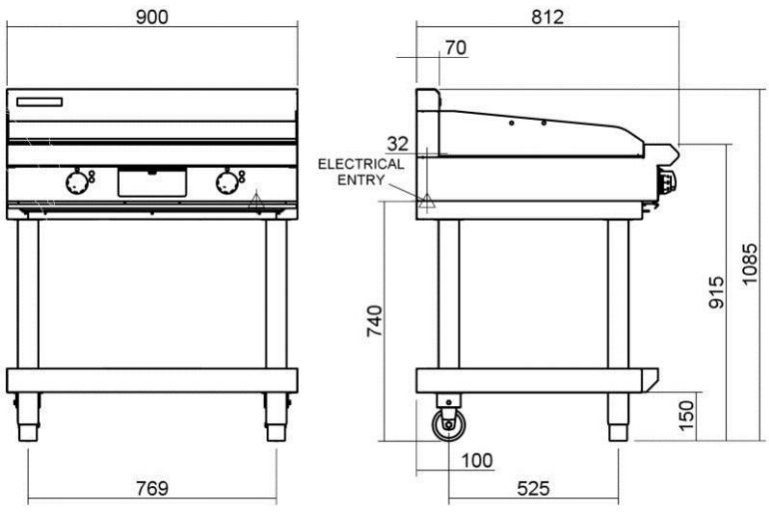

= ELECTRICAL CONNECTION POINT.

KW COMMERCIAL KITCHEN
Distributed by KW Commercial Kitchen | 1300 001 366
www.kwcommercial.com.au | sales@kwcommercial.com.au

Dimensions for Leg Stand Models

EP518 - LS

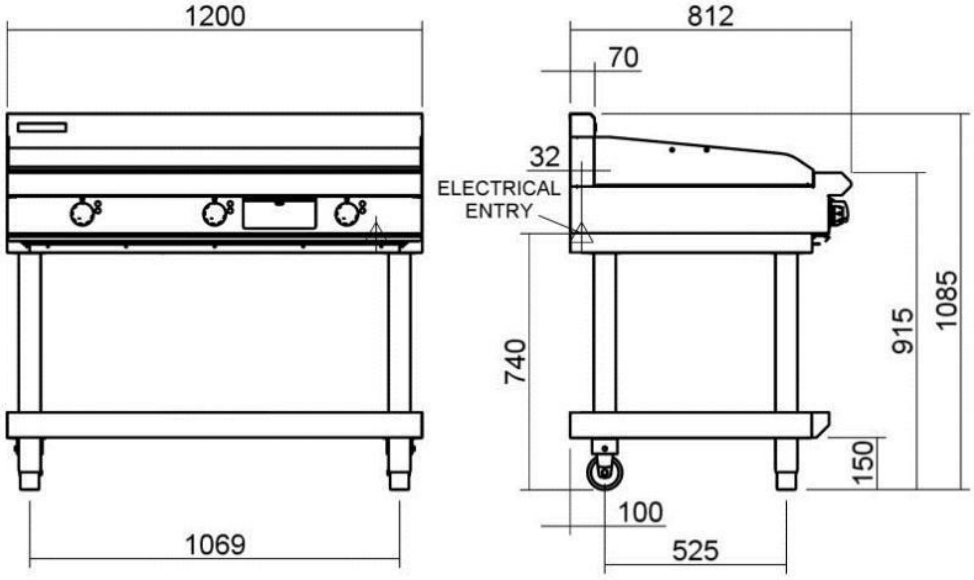

= ELECTRICAL CONNECTION POINT.

Distributed by KW Commercial Kitchen | 1300 001 366
www.kwcommercial.com.au | sales@kwcommercial.com.au

Dimensions for Refrigeration Base Models

EP516 - RB

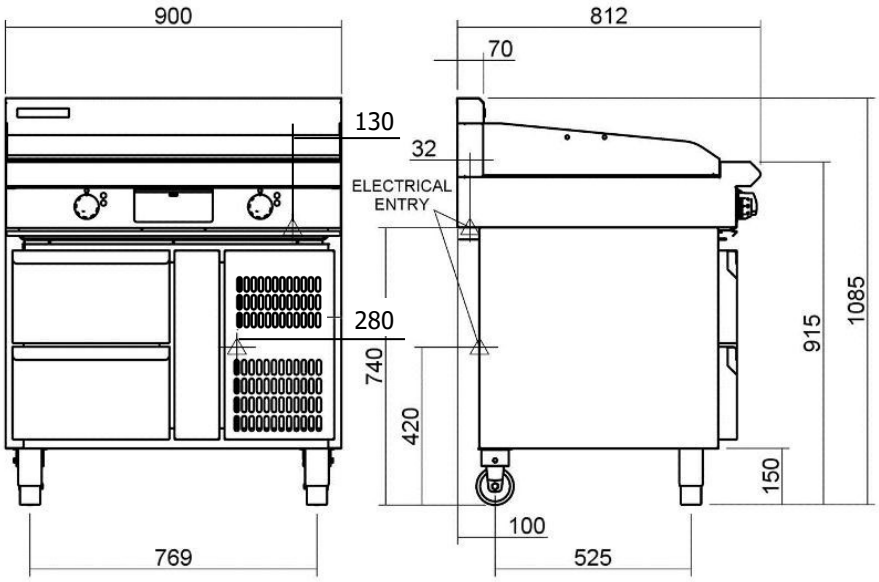

EP518 - RB

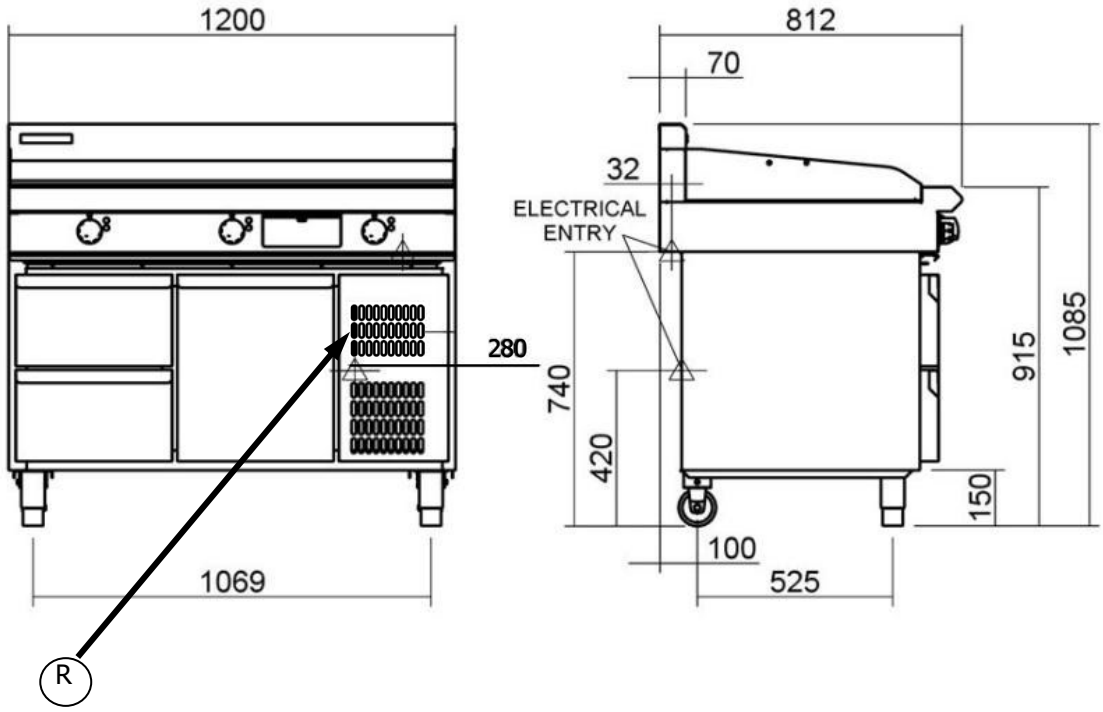

R = Rating Plate Location for this option.

= ELECTRICAL CONNECTION POINT.

Distributed by KW Commercial Kitchen | 1300 001 366
www.kwcommercial.com.au | sales@kwcommercial.com.au

Installation Requirements

NOTE:

- **It is most important that this appliance is installed correctly and that operation is correct before use. Installation shall comply with local electrical and health and safety requirements.**
- **This appliance shall be installed with sufficient ventilation to prevent the occurrence of unacceptable concentrations of health harmful substances in the room, the appliance is installed in.**

Blue Seal Electric Griddles are designed to provide years of satisfactory service and correct installation is essential to achieve the best performance, efficiency and trouble-free operation.
This appliance must be installed in accordance with National installation codes and in addition, in accordance with relevant National / Local codes covering electrical, fire and health and safety.

Australia / New Zealand	AS / NZS3000	- Wiring Rules.
United Kingdom:	BS 7671	- Requirements for Electrical Installations.

Installation must be carried out by qualified persons only. Failure to install equipment to the relevant codes and manufacturer's specifications shown in this section will void the warranty.

Components having adjustments protected (e.g. paint sealed) by the manufacturer are only to be adjusted by an authorised service agent. They are not to be adjusted by the installation person.

Unpacking

- Remove all packaging and transit protection from the appliance including all protective plastic coating from the exterior stainless steel panels.
- Check equipment and parts for damage. Report any damage immediately to the carrier and distributor.
- Ensure that the 2 front adjustable feet and rear rollers are securely fitted.
- Report any deficiencies to the distributor who supplied the appliance.
- Check that the available electrical supply is correct to that shown on the rating plate (Refer to the dimension drawings for rating plate location).

Location

1. Installation must include adequate clearance and ventilation, to prevent dangerous build up of combustion products.
2. Never directly connect a ventilation system to the appliance flue outlet.
3. Position the appliance in its approximate working position.
4. The legs / castors must always be fitted to the base of the appliance.
5. Components having adjustments protected (e.g. paint sealed) by the manufacturer are only to be adjusted by an authorised service agent. They are not to be adjusted by the installation person.

NOTE: Do not obstruct or block the appliances flue. Never directly connect a ventilation system to the appliance flue outlet.

Clearances

	Combustible Surface	Non Combustible Surface
Left / Right Hand Side	100mm	0mm
Rear	50mm	0mm

NOTE: This appliance should only be placed in close proximity to walls, partitions, furniture, or other surfaces if they are made of or cladded with non-combustible material.

KW COMMERCIAL KITCHEN
Distributed by KW Commercial Kitchen | 1300 001 366
www.kwcommercial.com.au | sales@kwcommercial.com.au

Assembly

NOTE:

- **All Models are delivered completely assembled. No further assembly is required. Refer to the information below for assembly instructions.**
- **This appliance is fitted with adjustable feet (castors) to enable the unit to be positioned securely and level. This should be carried out on completion of the electrical connection. Refer to the 'Electrical Connection' section.**

Optional Accessories (Refer to Replacement Parts List)

- Plinth Kit. For installation details, refer to the instructions supplied with each kit.

Electrical Connection

Warning

THIS APPLIANCE MUST BE EARTHED. IF THE SUPPLY CORD IS DAMAGED, IT MUST BE REPLACED BY A SUITABLY QUALIFIED PERSON IN ORDER TO AVOID A HAZARD.

NOTE: ALL ELECTRICAL CONNECTIONS MUST ONLY BE CARRIED OUT BY A QUALIFIED PERSON.

Each appliance should be connected to an adequately protected power supply and an isolation switch mounted adjacent to, but not behind the appliance. This switch must be clearly marked and readily accessible in case of fire.

1. Check that the electricity supply is correct to as shown on the Rating Plate attached to the lower front hand side of the front sill panel.
2. The supply terminal connections are located at the rear of the the appliance. Refer to 'Electrical Connections' in the 'Specifications' section of the manual.
3. Open the oven door and remove the control panel to allow connection access for the electrical supply.
4. Bring the supply cable up through the grommet at the rear of the appliance and through the compression type gland provided on the rear of the main electrical switchgear panel.
5. Connect the mains supply to L1, L2 and L3 fuse carrier connections for 3 phase and L1 for single phase (EP514).
6. Connect neutral and earth conductors to neutral stud and earth stud respectively.
7. For all connections ensure that conductors are secure and appropriately terminated.
8. Tighten the cable gland to secure against tension on the cable.

NOTE:

- **This appliance must be grounded / earthed.**
- **Fixed wiring installations must incorporate an all-pole disconnection switch.**

9. Correctly locate the appliance into its final operating position and using a spirit level, adjust the legs so that the appliance is level and at the correct height.
10. Connect the power supply to the appliance.
11. Check that the electrical supply is as shown in the 'Specifications' section.

KW COMMERCIAL KITCHEN
Distributed by KW Commercial Kitchen | 1300 001 366
www.kwcommercial.com.au | sales@kwcommercial.com.au

Commissioning

Before leaving the new installation;

Check the following functions in accordance with the operating instructions specified in the 'Operation' section of this manual.

- Check the current draw and loading for the equipment. Refer to the 'Specification' section for the correct electrical requirements.
- Check that all the connections are correct and that all cover panels have been re-fitted.
- Check that the appliance functions in accordance with the operating instructions.
- Ensure that this instruction manual is left with the appliance.
- Ensure that all the relevant details and contacts have been added to the front of this manual.

Ensure that the operator has been instructed in the areas of correct operation and shutdown procedure for the appliance.

This manual must be kept by the owner for future reference and a record of ***Date of Purchase, Date of Installation*** and ***Serial Number of Unit*** recorded and kept with this manual. **(These details can be found on the Rating Plateattached to the bottom right hand corner of the bottom sill. Refer to the 'Installation' section)**.

NOTE:

- **If it is not possible to get the appliance to operate correctly, turn 'Off' the electrical power supply and contact a qualified service person. The supplier of this appliance will be able to recommend a suitable person.**
- **Make sure that the electrical supply is turned 'Off' before any service or maintenance work is carried out.**

For the Refrigeration Cabinet Installation refer to the Refrigeration Cabinet Installation and Operation Manual supplied with the appliance.

KW COMMERCIAL KITCHEN
Distributed by KW Commercial Kitchen | 1300 001 366
www.kwcommercial.com.au | sales@kwcommercial.com.au

Operation Guide

Caution

- **This appliance is for professional use and is only to be used by qualified persons.**
- **Only authorised service persons are to carry out installation and servicing operations.**
- **Components having adjustments protected (e.g. paint sealed) by the manufacturer should not be adjusted by the user / operator.**

Description of Controls

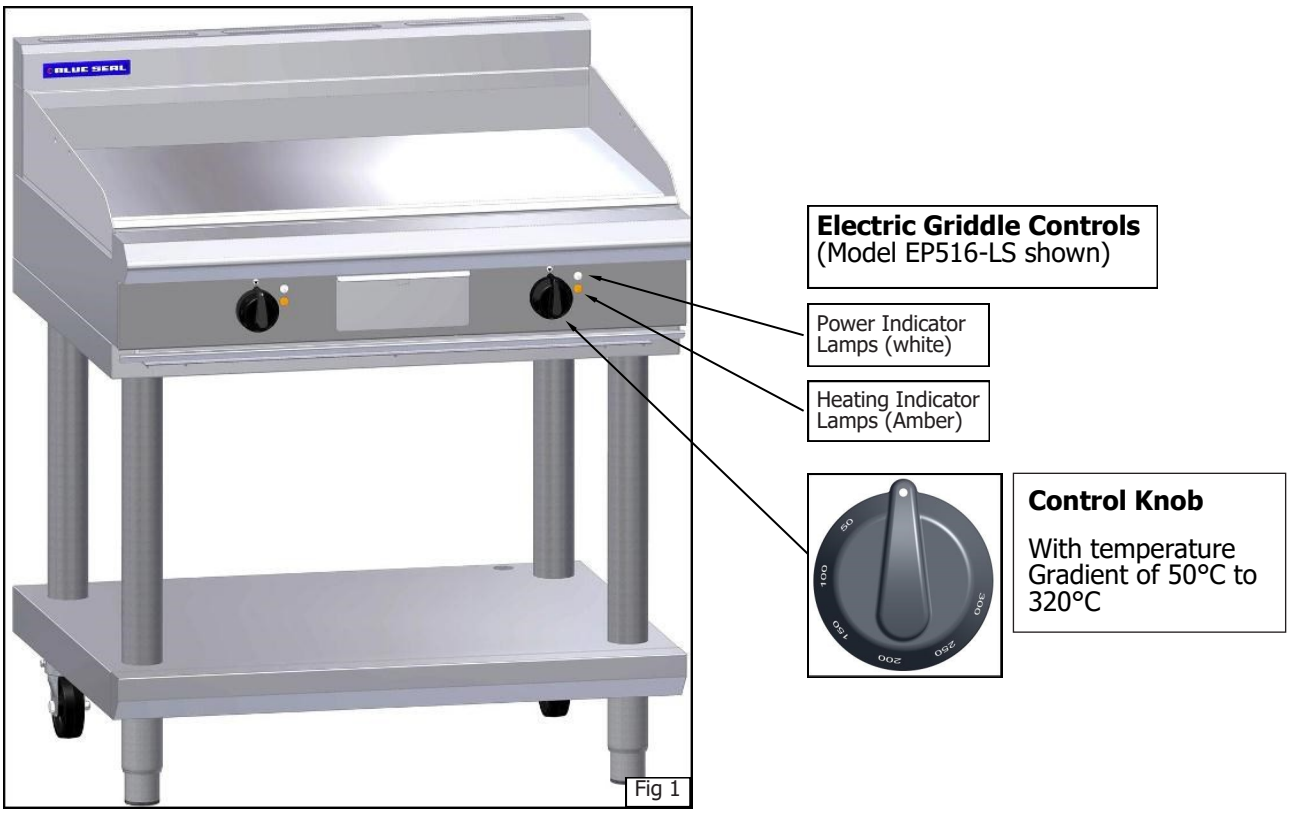

Fig 1

Griddle Operation

1. Turn 'ON' power at the mains supply, the white neon will illuminate.
2. Turn the thermostat control knob to the desired temperature. When the amber neon goes out, the desired temperature has been reached and the griddle is ready for use.

NOTE: Turning the control to a higher setting than required <u>will not</u> shorten the heat up time.

3. To turn 'OFF' the griddle, turn the thermostat control knob to the lowest setting and turn 'OFF' the mains power to the griddle.
4. Both the amber and white neons should be 'Off'.

For the Refrigeration Cabinet Operation refer to the Refrigeration Cabinet Installation and Operation Manual supplied with the appliance.

KW COMMERCIAL KITCHEN
Distributed by KW Commercial Kitchen | 1300 001 366
www.kwcommercial.com.au | sales@kwcommercial.com.au

General

Caution

Always turn 'Off' the electrical supply before cleaning the range.

This appliance is not water proof.

Do not use water jet spray or steam cleaner to clean interior or exterior of this appliance.

Clean the griddle regularly. A clean appliance looks better, will last longer and will perform better. Carbonised grease on the surface of the griddle plate will hinder the transfer of heat from the cooking surface to the food. This will result in loss of cooking efficiency.

NOTE: Each Heavy Duty Griddle is supplied with a scraper tool and a pack of blades for cleaning the griddle surface.
- **1 Flat Blade (pack) - 1 Ribbed Blade (pack) and 2 handles for Ribbed Heavy Duty Griddle.**
- **1 Flat Blade (pack) and I handle for Smooth Heavy Duty Griddle.**

Warning

BLADES FITTED TO SCRAPER TOOL ARE EXTREMELY SHARP AND ARE TO BE USED WITH CARE.

NEVER use the ribbed scraper blade on the flat chrome surfaced griddle plate.

Replacement blades and handles can be purchased separately. Refer to the 'Replacement Parts List' at the rear of the manual.

DO NOT use water on the griddle plate while this item is still hot as warping and cracking may occur. Allow the griddle plate to cool down before cleaning.

NOTE:
- **DO NOT use strong solvents, abrasive or caustic detergents as they could corrode or damage the griddle.**
- **To prevent rust forming on the griddle plate (Steel Plate), ensure that any detergent or cleaning material has been completely removed after each cleaning. The appliance should be switched 'On' briefly to ensure the griddle plate is dry. Spread oil or grease over the griddle surface to form a thin protective greasy film.**

To keep your griddle clean and operating at peak efficiency, follow the procedures shown below:-

After Each Use

1. Clean the griddle with the supplied scraper tools to remove any food debris.
2. Always ensure that the scraper tool blades are changed regularly to ensure that the scraper tool works efficiently and prevents damage to the griddle plate surface.

Caution

Always apply even pressure over the whole surface of the scraper tool when using on the flat surface of the griddle, to prevent scoring of griddle surface.

NEVER bang the sharp edge of the scraper tool on the flat surface of the griddle as this will damage the griddle and invalidate the warranty.

KW COMMERCIAL KITCHEN
Distributed by KW Commercial Kitchen | 1300 001 366
www.kwcommercial.com.au | sales@kwcommercial.com.au

Daily Cleaning

1. The grease drawer should be checked and emptied frequently to prevent overflow and spillage. Remove the grease drawer while still warm so that the grease is in a liquid state. Empty any grease from the drawer and wash thoroughly in the same manner as any cooking utensil.
2. Clean the Control Panel with a damp cloth lightly moistened with a solution of mild detergent and water.
3. Thoroughly clean the splash back, the interior and exterior surfaces of the griddle with hot water, a detergent solution and a soft scrubbing brush.
4. Brush the griddle surface with a soft bristled brush. Any carbon deposits should be removed using the supplied scraper tool followed by wiping with a cloth to prevent accumulation of food deposits.
5. Dry the griddle thoroughly with a dry cloth and polish with a soft dry cloth.

NOTE: Chrome Griddle Plate; DO NOT use strong solvents, harsh abrasive or caustic detergents as they could corrode or damage the chrome plate.

Weekly Cleaning

NOTE:

- **If griddle usage is very high, we recommend that weekly cleaning is carried out more frequently.**
- **Ensure that protective gloves are worn during the cleaning process.**
- **DO NOT use strong solvents, harsh abrasive or caustic detergents as they will damage the griddle and burners.**
- **DO NOT use water on the griddle plate while it is still hot as warping may occur. Allow these items to cool before cleaning.**

Griddle - Steel Plate

NOTE: To prevent rust forming on griddle plate, ensure that all detergent and cleaning material has been entirely removed after each cleaning process. Appliance should be switched 'On' briefly to ensure griddle plate is dry. Oil or grease should be spread over griddle surface to form a thin protective greasy film.

a. Remove and clean the grease collection drawer frequently to prevent over spills.
b. Clean the griddle surface thoroughly with the supplied scraper tool or a wire brush. If necessary use a griddle stone or a scotch bright pad on the griddle surface for the removal of stubborn or accumulated carbon deposits.
c. Occasionally bleach the griddle plate with vinegar when the plate is cold.
d. Clean with hot water, a mild detergent solution and a scrubbing brush. Dry all components thoroughly with a dry cloth.
e. The griddle should be switched 'On' briefly to ensure that the griddle plate is dry. A thin smear of cooking oil should be spread over the griddle to form a protective film.

Griddle - Chrome Plate

NOTE: To maintain the finish on the chrome griddle plate, ensure that all detergent and cleaning material has been entirely removed after each cleaning. Switch the griddle 'On' briefly to ensure griddle plate is dry.

Caution

Always apply even pressure over the whole surface of the scraper tool when using on the flat surface of the griddle, to prevent scoring of the griddle surface.

NEVER bang the sharp edge of the scraper tool on the flat surface of the griddle as this will damage the griddle and invalidate the warranty.

a. Remove and clean the grease collection drawer frequently to prevent over spills.
b. Clean the griddle surface thoroughly with the supplied scraper tool.
c. Allow the griddle plate to cool, then clean the griddle plate with a scrubbing brush, a mild non-abrasive detergent and water.
d. Occasionally bleach the griddle plate with vinegar when the griddle is cold.
e. Dry the griddle thoroughly with a dry cloth and polish with a soft dry cloth.
f. The griddle should be switched 'On' briefly to dry the griddle plate.

KW COMMERCIAL KITCHEN
Distributed by KW Commercial Kitchen | 1300 001 366
www.kwcommercial.com.au | sales@kwcommercial.com.au

Griddle Cooking Area

a. Clean the griddle cooking area with a soft cloth and a mild detergent and hot water solution.
b. Baked on deposits or discolouration may require a good quality stainless steel cleaner or stainless steel wool. Always apply cleaner when the appliance is cold and rub in the direction of the grain.
c. Remove the grease drawer and clean with a mild anti bacterial detergent and hot water solution using a soft bristled brush. Dry the grease drawer thoroughly with a dry cloth.

Stainless Steel Surfaces

a. Clean the exterior surfaces of the griddle with hot water, a mild detergent solution and a soft scrubbing brush. Note that the control knobs are a push fit onto the spindles and can be removed to clean the front of the control panel.
b. Baked on deposits or discolouration may require a good quality stainless steel cleaner or stainless steel wool. Always apply cleaner when the appliance is cold and rub in the direction of the grain.
c. To remove any discolouration, use an approved stainless steel cleaner or stainless steel wool. Always rub in the direction of the grain.
d. Remove the grease tray and clean with a mild anti bacterial detergent and hot water solution using a soft bristled brush.
e. Dry the grease tray thoroughly with a dry cloth.
f. Dry all components thoroughly with a dry cloth and polish with a soft dry cloth.

Periodic Maintenance

NOTE: All maintenance operations should only be carried out by a qualified service person.

To achieve the best results, cleaning must be regular and thorough and all controls and mechanical parts should be checked and adjusted periodically by a competent serviceman. If any small faults occur, have them attended to promptly. Don't wait until they cause a complete breakdown. It is recommended that the appliance is serviced every 6 months.

For the Refrigeration Cabinet Cleaning and Maintenance refer to the Refrigeration Cabinet Installation and Operation Manual supplied with the appliance.

KW COMMERCIAL KITCHEN
Distributed by KW Commercial Kitchen | 1300 001 366
www.kwcommercial.com.au | sales@kwcommercial.com.au

Fault Finding

This section provides an easy reference guide to the more common problems that may occur during the operation of your equipment. The fault finding guide in this section is intended to help you correct, or at least accurately diagnose problems with your equipment.

Although this section covers the most common problems reported, you may encounter a problem not covered in this section. In such instances, please contact your local authorised service agent who will make every effort to help you identify and resolve the problem. Please note that the service agent will require the following information:-

- **The Model Trade Name and Serial Number of the Appliance can be found on the Rating Plate located on the appliance. (Refer to the 'Dimensions' section).**

Fault	Possible Cause	Remedy
Element does not work when turned 'ON'.	Overtemp located behind the control panel has tripped.	Call the service provider.
	Check for an electrical short by checking that there is NO continuity between any 'Phase In' line and the metal body of the appliance.	Call the service provider.
	Check for the item failing (element, control etc) by using a multimeter.	Call the service provider.
Complete power failure of the appliance.	Check the fuse connection at the mains supply.	Replace the blown fuse.
	Ensure that the fuse size is correct to carry the load.	Carry out a continuity and resistance check on the appliance.
	Check for an electrical short to the appliance.	Call the service provider.

NOTE: Components having adjustments protected (e.g. paint sealed) by the manufacturer, are only to be adjusted by an authorised service agent. They are not to be adjusted by an unqualified service person.

For the Refrigeration Cabinet Fault Finding details, refer to the Refrigeration Cabinet Installation and Operation Manual supplied with the appliance.

KW COMMERCIAL KITCHEN
Distributed by KW Commercial Kitchen | 1300 001 366
www.kwcommercial.com.au | sales@kwcommercial.com.au

EP513 / EP514 Wiring Schematic

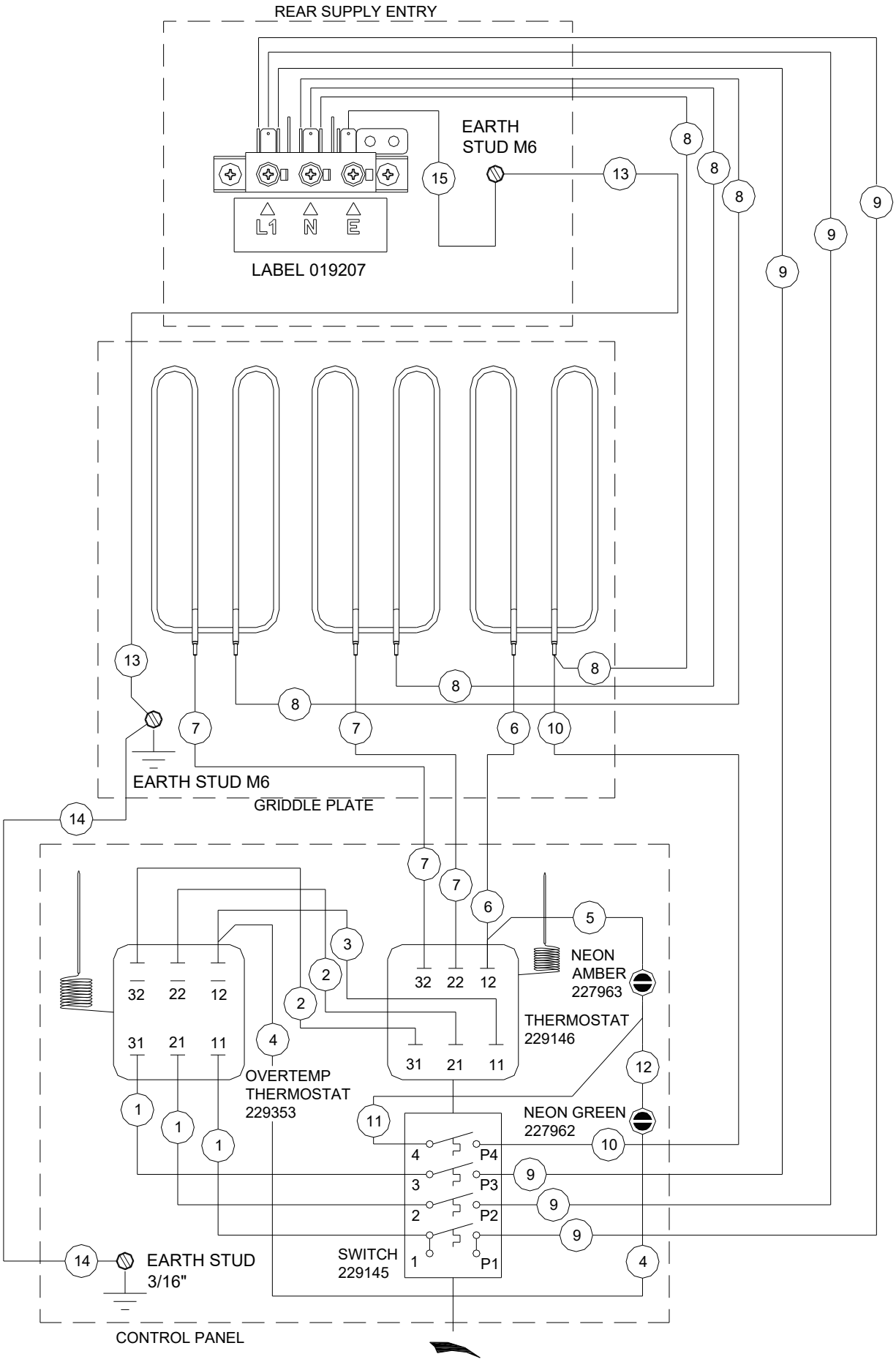

Distributed by KW Commercial Kitchen | 1300 001 366
www.kwcommercial.com.au | sales@kwcommercial.com.au

EP516 Wiring Schematic

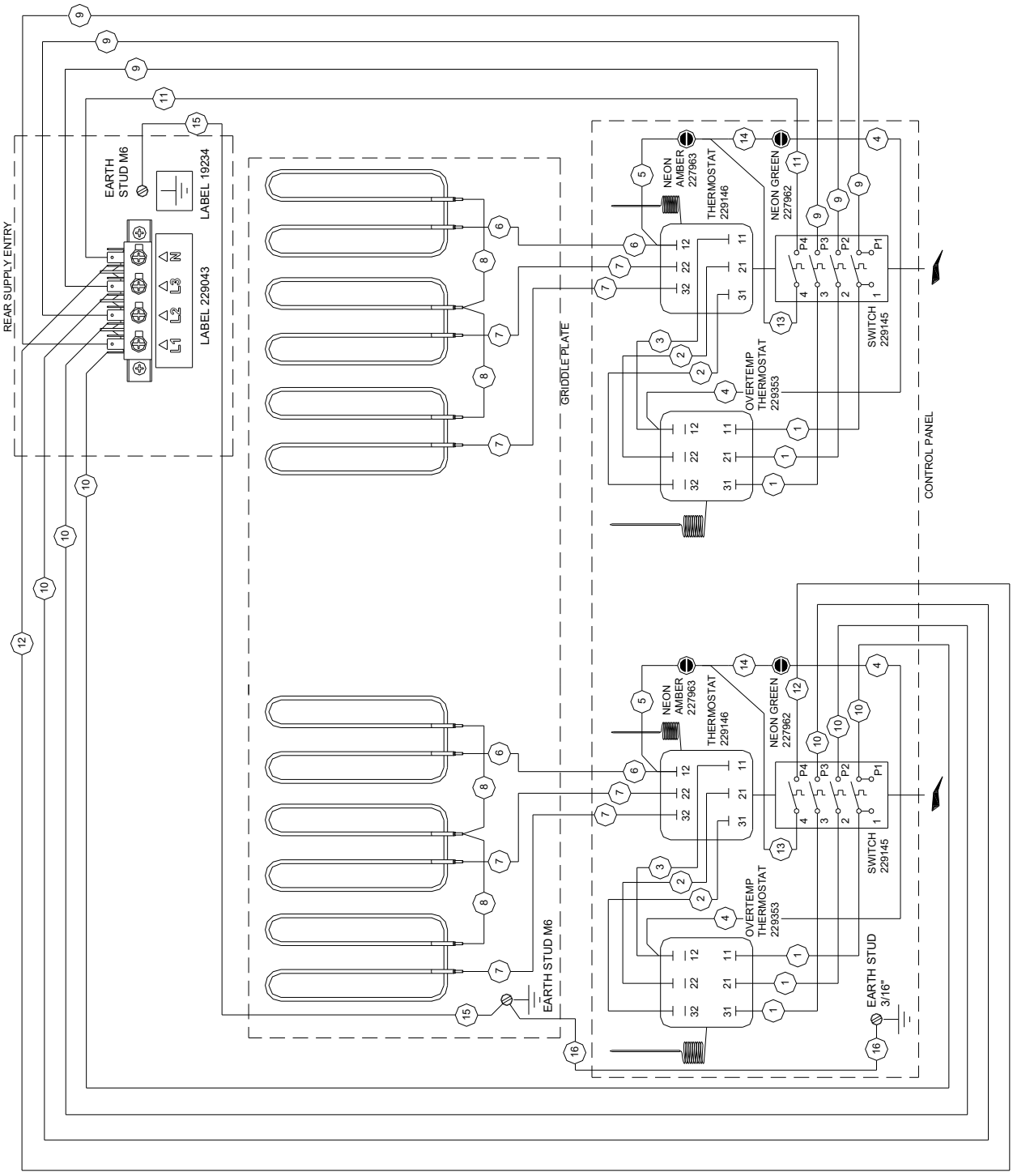

Distributed by KW Commercial Kitchen | 1300 001 366
www.kwcommercial.com.au | sales@kwcommercial.com.au

EP518 Wiring Schematic

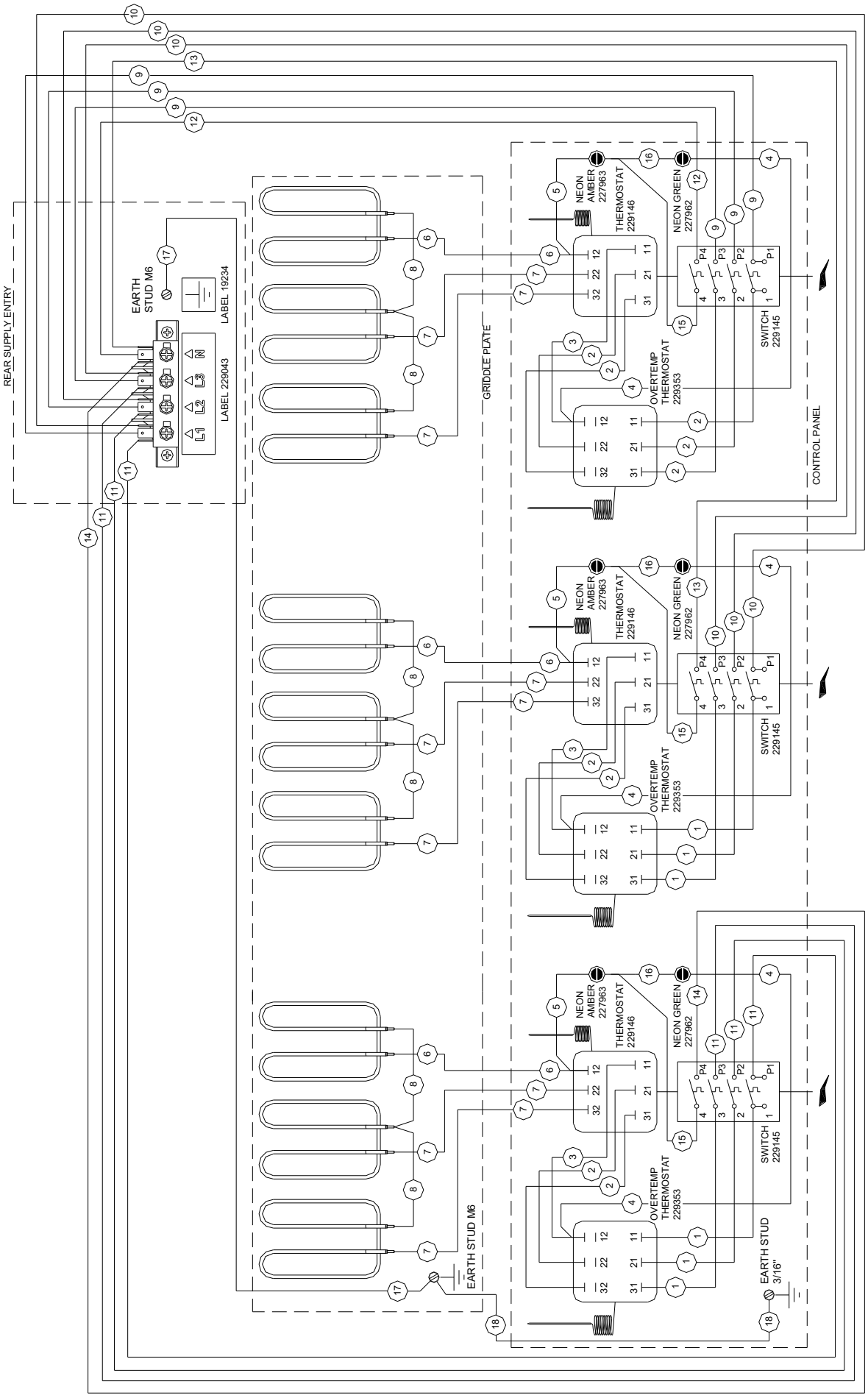

KW COMMERCIAL KITCHEN
Distributed by KW Commercial Kitchen | 1300 001 366
www.kwcommercial.com.au | sales@kwcommercial.com.au

Replacement Parts List

IMPORTANT:

Only genuine authorized replacement parts should be used for servicing and repair of this appliance. Instructions supplied with parts should be followed when replacing components.

For further information and servicing instructions, contact your nearest authorized service branch (contact details are as shown on reverse of front cover of this manual).

When ordering replacement parts, please quote the part number and the description as listed below. If the part required is not listed below, request the part by description and quote model number and serial number which is shown on the rating plate.

Controls

227392	Control Knob - 50°C to 300°C.
229146	Thermostat - 50°C to 300°C.
229353	Overtemp 360°C, 3 Pole.
229145	Switch 4 Pole.
228922	Neon White.
227963	Neon Orange.
228571	Index Mark Moulding.

General

239804	Element 2400W	(600mm Models).
239803	Element 2000W	(450 - 1200mm Models).
228400	Grease Drawer.	
229224	Control Panel Hinge.	
227850	Leg 150mm (Adjustable) (Flush Stud)	- CB and RB Models.
227851	Leg 150mm (Adjustable) (Extended Stud)	- LS Models.
227855	Leg 80mm	- B Models.
229674	Rear Roller Assy	- CB and LS Models.
232351	Rear Roller Assy (3”)	- RB Models.

Accessories

228566	Griddle Scraper Tool.	
228567	Smooth Plate Scraper Blades	(Pack of 2 blades).
233817	Ribbed Plate Scraper Blade	(Individual Blade).
234792	450mm Plinth Kit	(LS Model only).
228795	600mm Plinth Kit	(LS and CB Models only).
228799	900mm Plinth Kit	(LS and CB Models only).
228803	1200mm Plinth Kit	(LS and CB Models only).
228801	Refrigeration Base - 900mm Plinth Kit	(RB Models only).
228805	Refrigeration Base - 1200mm Plinth Kit	(RB Models only).

Griddle Plate Options

Griddle Plate	Standard	Chromed (-C)	Ribbed
450 mm	250152	N/A	ON REQUEST, Various options (depending on ribbed section width on LH or RH side).
600 mm	229212	229267	
900 mm	229248	229270	
1200 mm	229279	229281	

For the Refrigeration Cabinet Replacement Parts refer to the Refrigeration Cabinet Installation and Operation Manual supplied with the appliance.

KW COMMERCIAL KITCHEN
Distributed by KW Commercial Kitchen | 1300 001 366
www.kwcommercial.com.au | sales@kwcommercial.com.au