PRODUCT DOCUMENT PACK

Prepared and distributed by KW Commercial Kitchen

PRODUCT

Blue Seal Evolution Series GP518-LS 1200mm Gas Griddle Leg Stand

Model / SKU: GP518-LS

KW COMMERCIAL KITCHEN

7/72 Canterbury Road, Bankstown NSW 2200

Phone 1300 001 366

Email sales@kwcommercial.com.au

Web www.kwcommercial.com.au

Scan for the current KW product page

DOCUMENT NOTICE

The supplier document begins on the next page. KW contact branding is added in a separate footer area and does not replace the supplier's instructions, specifications or warranty terms.

Official supplier source: https://moffat.global.ssl.fastly.net/sites/default/files/products/manual/UM_Blue%20Seal%20Evolution%20Series_GP2

BLUE SEAL®

EVOLUTION SERIES

INSTALLATION AND OPERATION MANUAL

GAS GRIDDLE

GP513
GP514
GP516
GP518

Date Purchased _____

Serial Number _____

Dealer _____

_____

Service Provider _____

_____

229284-20

MANUFACTURED BY

Moffat Limited
Rolleston 7675
New Zealand

INTERNATIONAL CONTACTS

AUSTRALIA

Moffat Pty Limited

Web:	www.moffat.com.au
E.Mail:	vsales@moffat.com.au
Main Office:	(tel) +61 (03) 9518 3888
	(fax) +61 (03) 9518 3838
Service:	(tel): 1800 622 216
Spares:	(tel): 1800 337 963
Customer Service:	(tel): 1800 335 315
	(fax): 1800 350 281

CANADA

Serve Canada

Web:	www.servecanada.com
E.Mail:	info@servecanada.com
Sales:	(tel): 800 551 8795 (Toll Free)
Service:	(tel): 800 263 1455 (Toll Free)

NEW ZEALAND

Moffat Limited

Web:	www.moffat.co.nz
E.Mail:	sales@moffat.co.nz
Main Office:	(tel): 0800 663328

UNITED KINGDOM

Blue Seal

Web:	www.blue-seal.co.uk
E.Mail:	sales@blue-seal.co.uk
Sales:	(tel): +44 121 327 5575
	(fax): +44 121 327 9711
Spares:	(tel): +44 121 322 6640
	(fax): +44 121 327 9201
Service:	(tel): +44 121 322 6644
	(fax): +44 121 327 6257

UNITED STATES

Moffat

Web:	www.moffat.com
Sales:	(tel): 1-800 551 8795 (Toll Free)
	(tel): 336 661 1556
	(fax): 336 661 9546
Service:	(tel): 866 673 7937 (Toll Free)

REST OF WORLD

Moffat Limited

Web:	www.moffat.co.nz
E.Mail:	export@moffat.co.nz

The reproduction or copying of any part of this manual by any means whatsoever is strictly forbidden unless authorized previously in writing by the manufacturer.

In line with policy to continually develop and improve its products, Moffat Ltd. reserves the right to change the specifications and design without prior notice.

© Copyright Moffat Ltd. December 2017.

Contents

Blue Seal Gas Griddle

GP513 Gas Griddle, 450mm.
GP514 Gas Griddle, 600mm.
GP516 Gas Griddle, 900mm.
GP518 Gas Griddle, 1200mm.

Introduction 2

Specifications 3
- Model Numbers Covered in this Specification
- General
- Gas Supply Requirements
- Gas Connection

Dimensions 6

Installation 10
- Installation Requirements
- Unpacking
- Location
- Clearances
- Assembly
- Gas Connection
- Commissioning

Operation 13
- Operation Guide
- Description of Controls
- Lighting Pilot Burner
- Lighting Main Burner
- Turning 'Off' Main Burner
- Re-Setting Overtemp Device (All UK Chrome Plate and optional All Other Models)

Cleaning and Maintenance 16
- General
- After Each Use
- Daily Cleaning
- Weekly Cleaning

Fault Finding 19

Gas Conversion and Specifications 20
- Conversion Procedure
- Gas Specifications

Replacement Parts List 25

Introduction

We are confident that you will be delighted with your BLUE SEAL GAS GRIDDLE, and it will become a most valued appliance in your commercial kitchen.
To ensure you receive the utmost benefit from your new BLUE SEAL GAS GRIDDLE, there are two important things you can do.

Firstly:

Please read the instruction book carefully and follow the directions given. The time taken will be well spent.

Secondly:

If you are unsure of any aspect of the installation, instructions or performance of your appliance, contact your BLUE SEAL dealer promptly. In many cases a phone call could answer your question.

CE Only:

These instructions are only valid if the country code appears on appliance. If code does not appear on appliance, refer to supplier of this appliance to obtain technical instructions for adapting appliance to conditions for use in that country.

Warning

IMPROPER INSTALLATION, ADJUSTMENT, ALTERATION, SERVICE OR MAINTENANCE CAN CAUSE PROPERTY DAMAGE, INJURY OR DEATH. READ THE INSTALLATION, OPERATING AND MAINTENANCE INSTRUCTIONS THOROUGHLY BEFORE INSTALLING OR SERVICING THIS APPLIANCE.

Warning

INSTRUCTIONS TO BE FOLLOWED IN THE EVENT THE USER SMELLS GAS ARE TO BE POSTED IN A PROMINENT LOCATION. THIS INFORMATION SHALL BE OBTAINED BY CONSULTING THE LOCAL GAS SUPPLIER.

Warning

GREAT CARE MUST BE TAKEN BY THE OPERATOR TO USE THE EQUIPMENT SAFELY TO GUARD IT AGAINST RISK OF FIRE.

- **THE APPLIANCE MUST NOT BE LEFT ON UNATTENDED.**
- **IT IS RECOMMENDED THAT A REGULAR INSPECTION IS MADE BY A COMPETENT SERVICE PERSON TO ENSURE CORRECT AND SAFE OPERATION OF YOUR APPLIANCE IS MAINTAINED.**
- **DO NOT STORE OR USE GASOLINE OR OTHER FLAMMABLE VAPOURS OR LIQUIDS IN THE VICINITY OF THIS OR ANY OTHER APPLIANCE.**
- **DO NOT SPRAY AEROSOLS IN THE VICINITY OF THIS APPLIANCE WHILE IT IS IN OPERATION.**

Caution

- **This appliance is for professional use and is only to be used by qualified persons.**
- **Only authorised service persons are to carry out installation, servicing or gas conversion operations.**
- **Components having adjustments protected (e.g. paint sealed) by the manufacturer should not be adjusted by the user / operator.**
- **DO NOT operate the appliance without the legs supplied fitted.**

KW COMMERCIAL KITCHEN
Distributed by KW Commercial Kitchen | 1300 001 366
www.kwcommercial.com.au | sales@kwcommercial.com.au

Model Numbers Covered in this Specification

GP513 - B Gas Griddle 450mm wide Bench Model.
GP513 - CB Gas Griddle 450mm wide with Cabinet Base.
GP513 - LS Gas Griddle 450mm wide on Leg Stand.

GP514 - B Gas Griddle 600mm wide Bench Model.
GP514 - CB Gas Griddle 600mm wide with Cabinet Base.
GP514 - LS Gas Griddle 600mm wide on Leg Stand.

GP516 - B Gas Griddle 900mm wide Bench Model.
GP516 - CB Gas Griddle 900mm wide with Cabinet Base.
GP516 - LS Gas Griddle 900mm wide on Leg Stand.
GP516 - RB Gas Griddle 900mm wide with Refrigerated Base.

GP518 - B Gas Griddle 1200mm wide Bench Model.
GP518 - CB Gas Griddle 1200mm wide with Cabinet Base.
GP518 - LS Gas Griddle 1200mm wide on Leg Stand.
GP518 - RB Gas Griddle 1200mm wide with Refrigerated Base.

General

A commercial heavy duty, fully modular, gas fired griddle using a thermostatic burner system and fitted with aluminised steel burners with full pilot and flame failure protection and piezo ignition. It uses a 20mm thick griddle plate with the option of either ribbed or chromed mirror plate options.

All UK Chrome Plate and optional All Other Models are fitted with an overtemp device which isolates the gas supply to the burners should the gas control system or thermostat malfunction, thus preventing overheating of the griddle.

The Griddle is constructed as a hob unit and is available in 4 options, on Leg Stand (-LS), Bench Mount (-B), Cabinet Base (-CB) or with Refrigerated Base (RB) models (RB Models available for GP516 and GP518 Models only).

Gas Supply Requirements

- Australia

	Natural Gas				LP Gas (Propane)			
	GP513	GP514	GP516	GP518	GP513	GP514	GP516	GP518
Input Rating (N.H.G.C.)	40 MJ/hr	53 MJ/hr	80 MJ/hr	108 MJ/hr	40 MJ/hr	53 MJ/hr	80 MJ/hr	108 MJ/hr
Supply Pressure	1.13 - 3.40 kPa				2.75 - 4.50 kPa			
Burner Operating Pressure (*)	0.90 kPa	0.85 kPa	0.90 kPa		2.6 kPa	2.5 kPa	2.6 kPa	
Gas Connection	¾″ BSP Male							

- New Zealand Only:

	Natural Gas				LP Gas			
	GP513	GP514	GP516	GP518	GP513	GP514	GP516	GP518
Input Rating (N.H.G.C.)	40 MJ/hr	53 MJ/hr	80 MJ/hr	108 MJ/hr	40 MJ/hr	53 MJ/hr	80 MJ/hr	108 MJ/hr
Supply Pressure	1.13 - 3.40 kPa				2.75 - 4.50 kPa			
Burner Operating Pressure (*)	0.90 kPa	0.85 kPa	0.90 kPa		2.6 kPa	2.5 kPa	2.6 kPa	
Gas Connection	¾″ BSP Male							

- United Kingdom & EU (CE)

Category: **II_{2H3P} (20, 37), .$II_{2H3B/P}$ (20, 28-30),**
Flue Type: **$A_{1.}$**

	Natural Gas (G20)				Propane (G31)			
	GP513	GP514	GP516	GP518	GP513	GP514	GP516	GP518
Heat Input (nett)	10.5 kW	13.3 kW	21 kW	28.5 kW	10.5 kW	13.3 kW	21 kW	28.5 kW
Gas Rate (nett)	1.11 m^3/hr	1.41 m^3/hr	2.22 m^3/hr	3.02 m^3/hr	0.81 kg/hr	1.03 kg/hr	1.63 kg/hr	2.21 kg/hr
Supply Pressure	20 mbar				37 mbar			
Burner Operating Pressure (*)	8.2 mbar	8.5 mbar	8.2 mbar		26 mbar			
Gas Connection	$^3/_4$″ BSP Male							

	LP Gas (G30 - G31)			
	GP513	GP514	GP516	GP518
Heat Input (nett)	12.0 kW	16.0 kW	24.0 kW	32.5 kW
Gas Rate (nett)	0.95 kg/hr	1.26 kg/hr	1.89 kg/hr	2.56 kg/hr
Supply Pressure	28 - 30 mbar			
Burner Operating Pressure (*)	26 mbar			
Gas Connection	$^3/_4$″ BSP Male			

*** - Measure burner operating pressure at gas control valve outlet test point with burner operating at 'High' setting. Operating pressure is ex-factory set, through the appliance regulator and not to be adjusted, apart from when converting between gases, if required. (Refer to 'Gas Conversion' section for details).**

For Refrigeration Cabinet Specifications refer to Refrigeration Cabinet Installation and Operation Manual supplied with appliance.

KW COMMERCIAL KITCHEN
Distributed by KW Commercial Kitchen | 1300 001 366
www.kwcommercial.com.au | sales@kwcommercial.com.au

- All Other Markets

	Natural Gas				Town Gas (**)			
	GP8450	GP8600	GP8900	GP8120	GP8450	GP8600	GP8900	GP8120
Input Rating (N.H.G.C.)	40 MJ/hr	53 MJ/hr	80 MJ/hr	108 MJ/hr	40 MJ/hr	53 MJ/hr	80 MJ/hr	108 MJ/hr
Supply Pressure	1.13 - 3.40 kPa				0.75 - 1.50 kPa			
Burner Operating Pressure (*)	0.90 kPa	0.85 kPa	0.90 kPa		0.45 kPa			
Gas Connection	¾" BSP Male							

	LP Gas (Propane)				Butane			
	GP513	GP514	GP516	GP518	GP513	GP514	GP516	GP518
Input Rating (N.H.G.C.)	40 MJ/hr	53 MJ/hr	80 MJ/hr	108 MJ/hr	40 MJ/hr	53 MJ/hr	80 MJ/hr	108 MJ/hr
Supply Pressure	2.75 - 4.50 kPa				2.75 - 4.50 kPa			
Burner Operating Pressure (*)	2.6 kPa	2.5 kPa	2.6 kPa		2.6 kPa	2.5 kPa	2.6 kPa	
Gas Connection	¾" BSP Male							

(*) NOTE:

- **(*) Measure burner operating pressure at at gas valve outlet test point with burner operating at 'High Flame' setting.**
- **NAT, LPG & Butane Only - Operating pressure is ex-factory set and is not to be adjusted, unless when converting between gases, if required.**
- **(**) TOWN GAS Only - Adjust burner operating pressure using adjustable gas regulator supplied.**
- **Refer to 'Gas Conversion and Specifications' section in this manual for further details.**

Gas Connection

Bench Models

Gas supply connection point is located at rear of appliance, approximately 130mm from right hand side, 32mm from rear, 55mm from floor and is reached from rear of appliance. (Refer to 'Dimensions' section).

Connection is ¾" BSP male (For all other models).

All Other Models

Gas supply connection point is located at rear of appliance, approximately 130mm from right hand side, 32mm from rear, 655mm from floor and is reached from beneath appliance. (Refer to 'Dimensions' section).

Connection is ¾" BSP male (For all other models).

KW COMMERCIAL KITCHEN
Distributed by KW Commercial Kitchen | 1300 001 366
www.kwcommercial.com.au | sales@kwcommercial.com.au

Dimensions for Bench Models

(R) = Rating Plate Location for this option.

GP513 - B

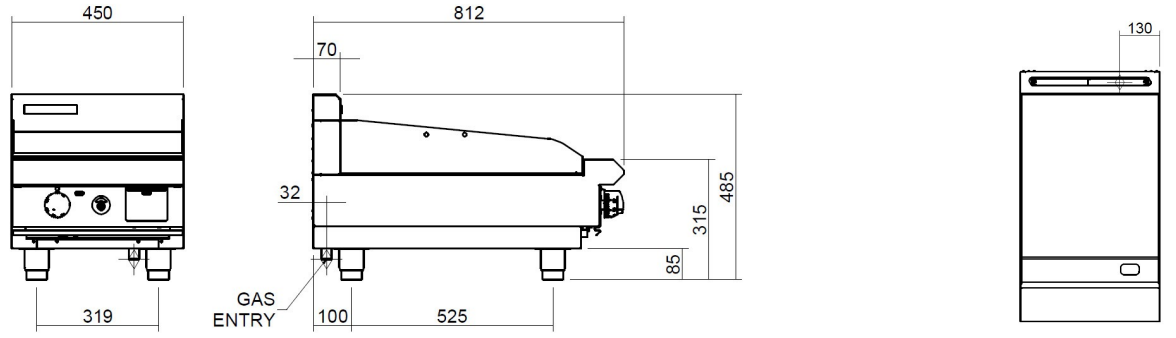

GP514 - B

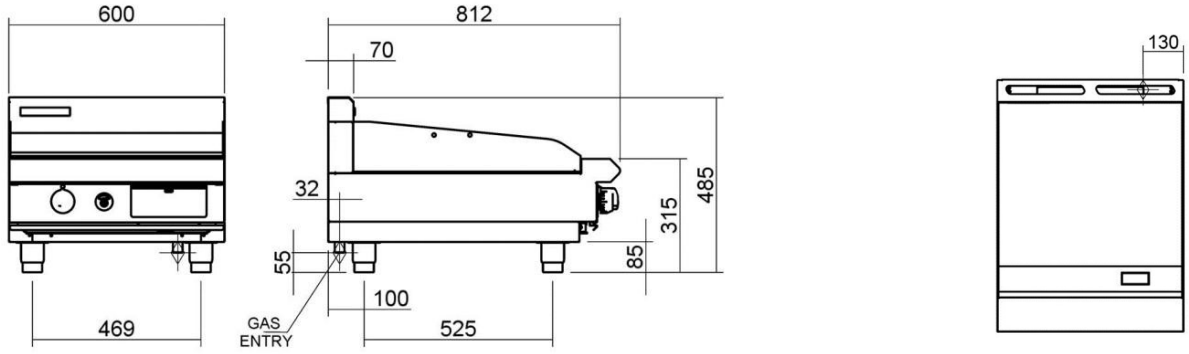

GP516 - B

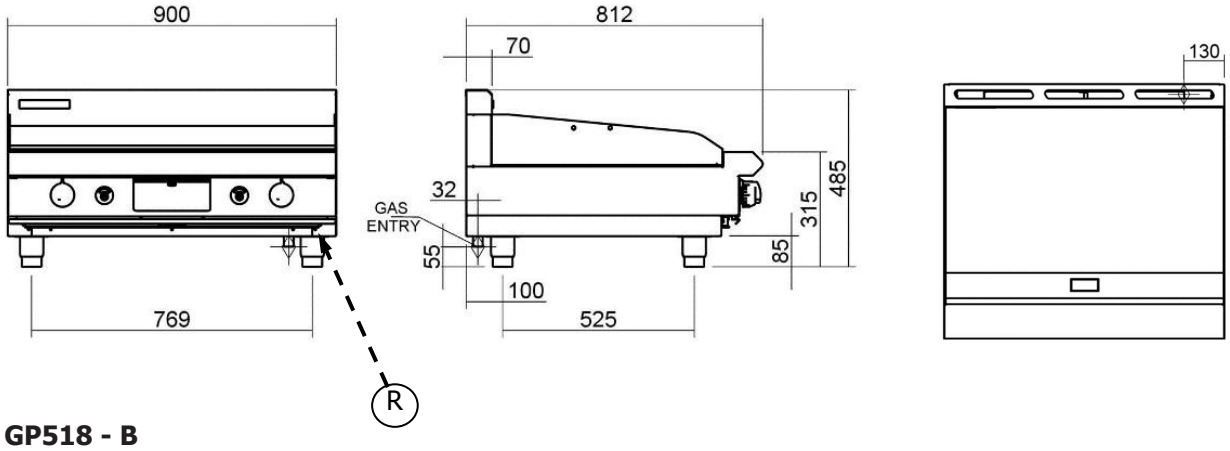

GP518 - B

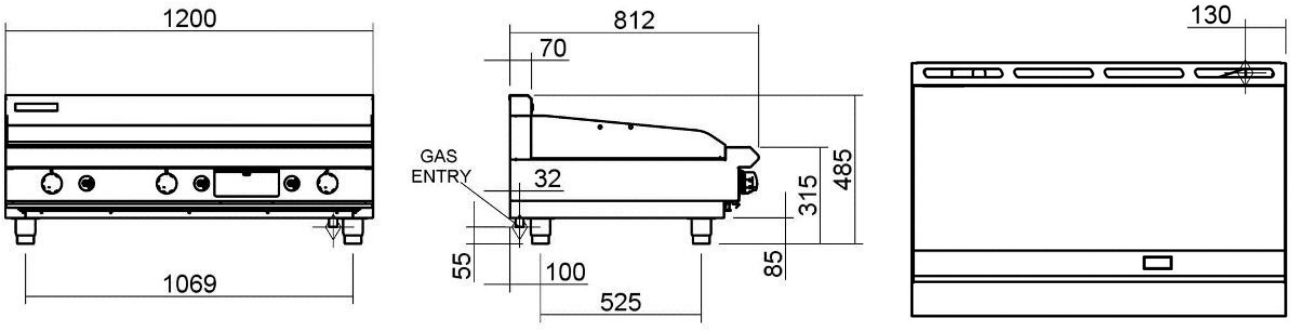

KW COMMERCIAL KITCHEN
Distributed by KW Commercial Kitchen | 1300 001 366
www.kwcommercial.com.au | sales@kwcommercial.com.au

Dimensions for Cabinet Base Models

(R) = Rating Plate Location for this option.

GP513 - CB

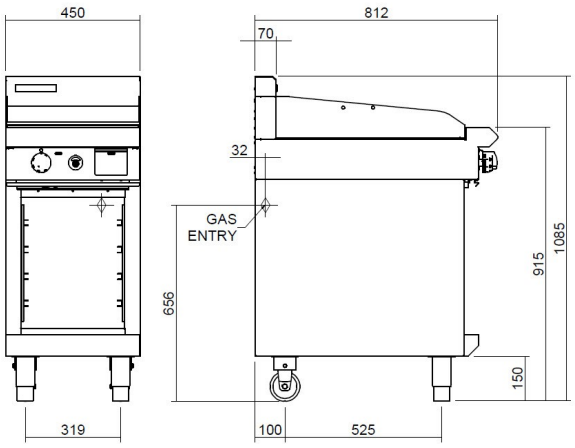

GP514 - CB

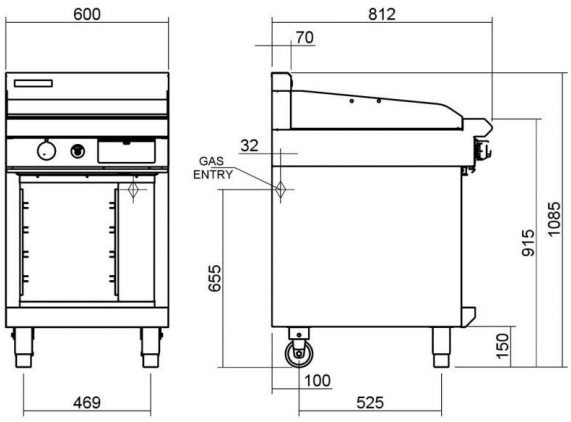

GP516 - CB

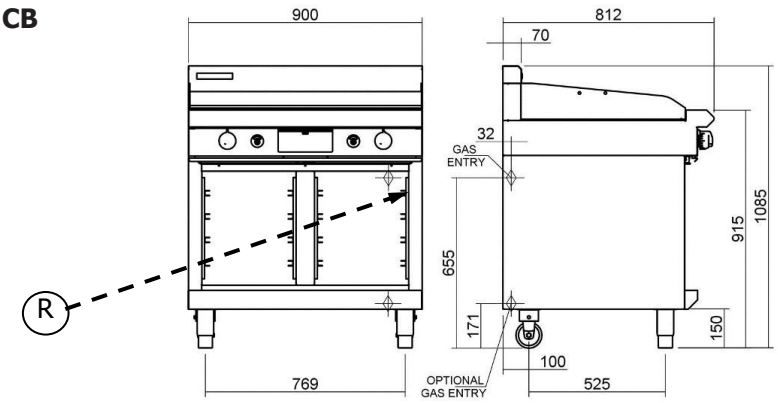

GP518 - CB

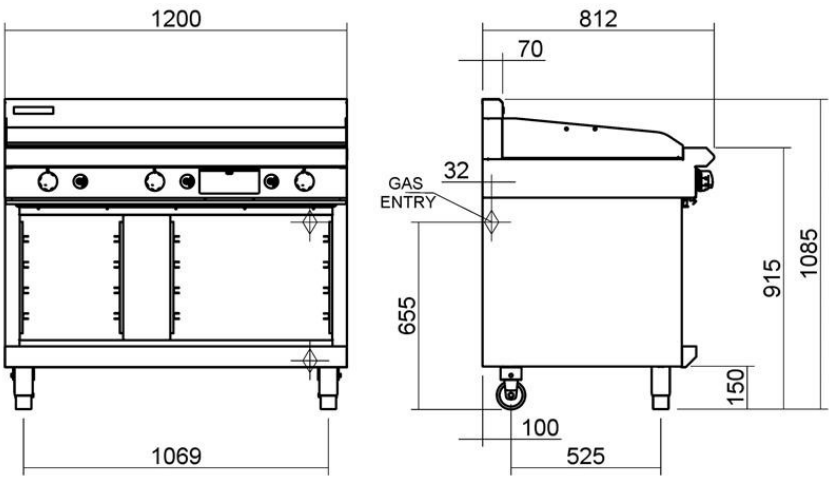

KW COMMERCIAL KITCHEN
Distributed by KW Commercial Kitchen | 1300 001 366
www.kwcommercial.com.au | sales@kwcommercial.com.au

Dimensions for Leg Stand Models

Ⓡ = Rating Plate Location for this option.

GP513 - LS

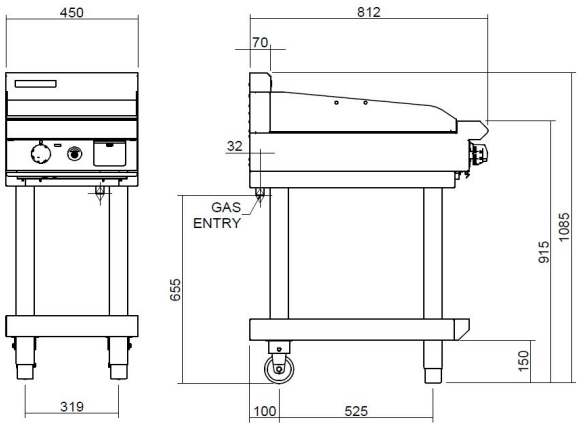

GP514 - LS

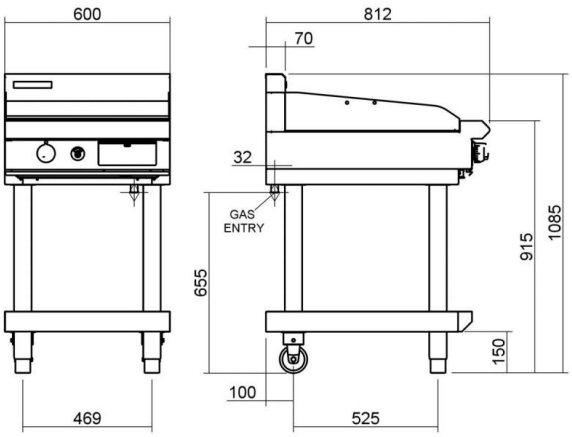

GP516 - LS

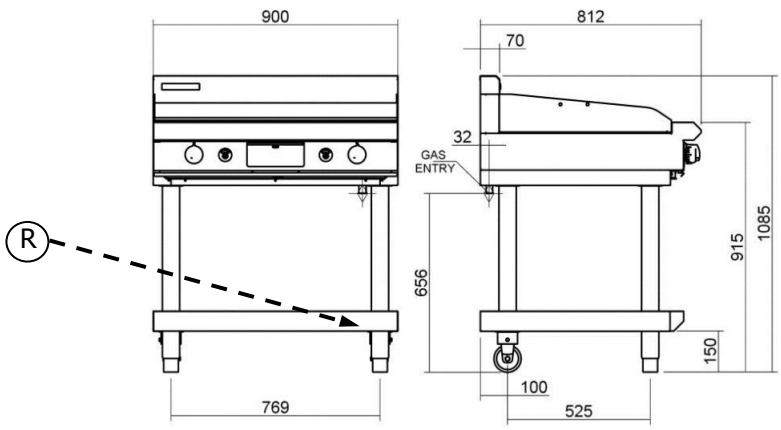

GP518 - LS

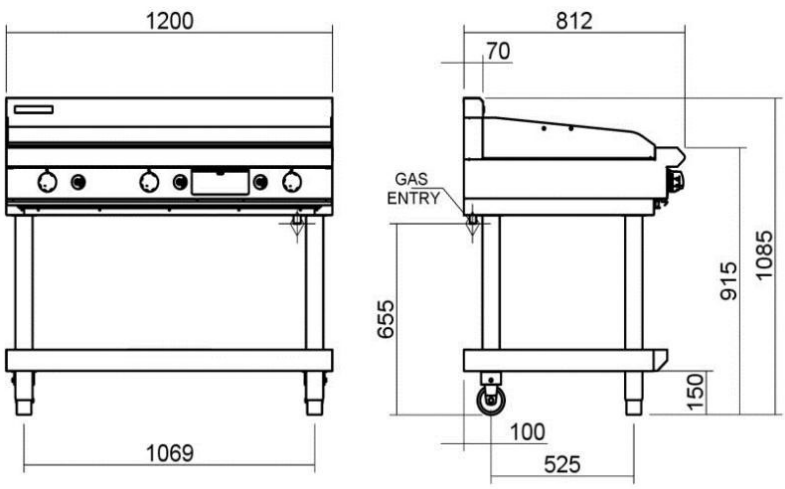

KW COMMERCIAL KITCHEN
Distributed by KW Commercial Kitchen | 1300 001 366
www.kwcommercial.com.au | sales@kwcommercial.com.au

Dimensions for Refrigeration Base Models

(R) = Rating Plate Location for this option.

GP516 - RB

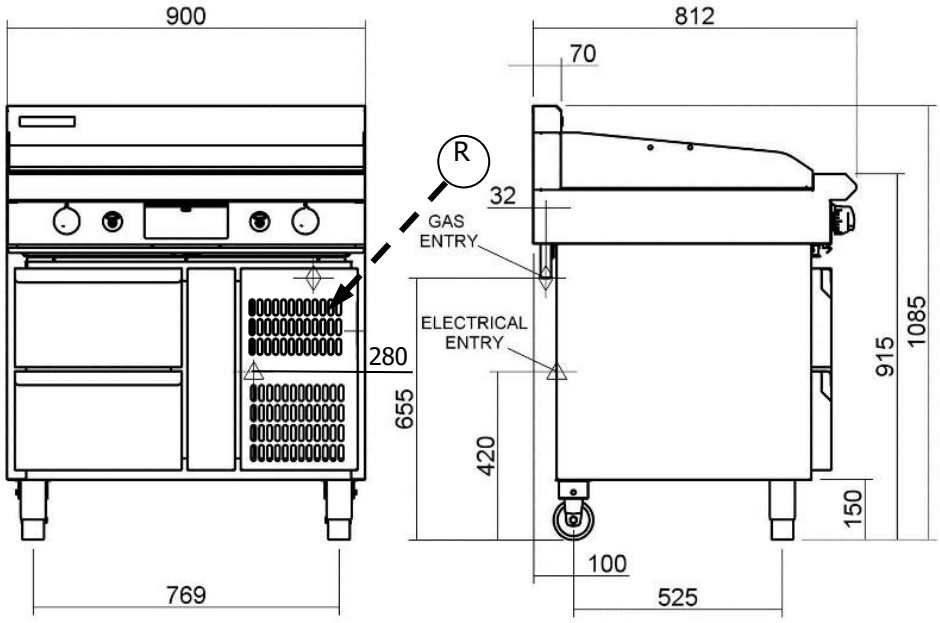

GP518 - RB

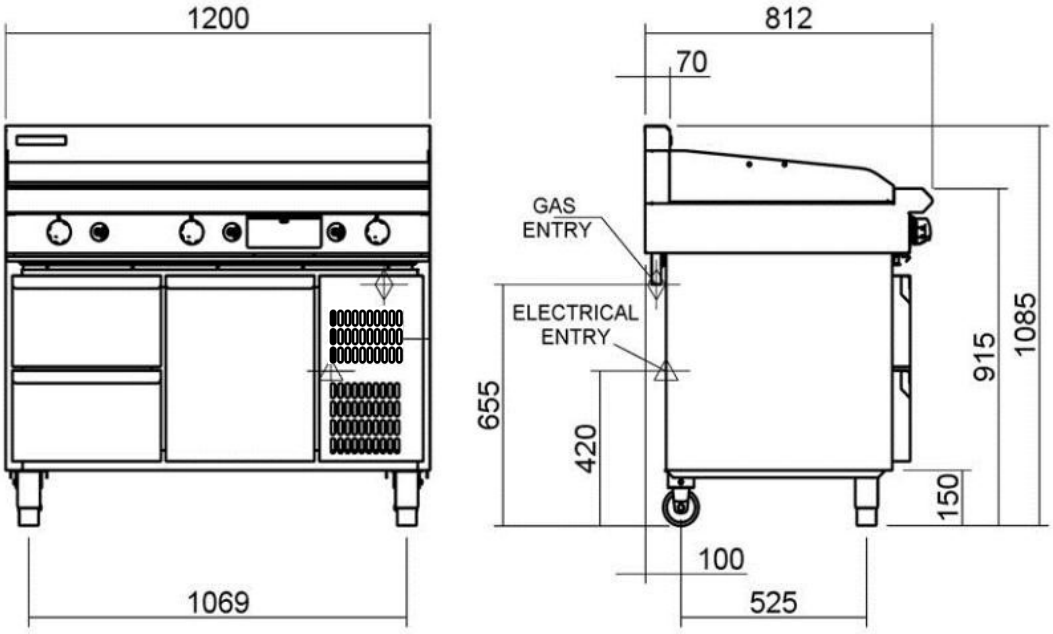

Distributed by KW Commercial Kitchen | 1300 001 366
www.kwcommercial.com.au | sales@kwcommercial.com.au

Installation Requirements

NOTE:

- **It is most important that this appliance is installed correctly and that operation is correct before use. Installation shall comply with local gas, health and safety requirements.**
- **This appliance shall be installed with sufficient ventilation to prevent occurrence of unacceptable concentrations of health harmful substances in the room, appliance is installed in.**

Blue Seal Gas Griddles are designed to provide years of satisfactory service and correct installation is essential to achieve the best performance, efficiency and trouble-free operation.
This appliance must be installed in accordance with National installation codes and in addition, in accordance with relevant National / Local codes covering gas and fire safety.

Australia:	- AS5601	- Gas Installations.
New Zealand:	- NZS5261	- Gas Installation.
United Kingdom:	- Gas Safety (Installation & Use) Regulations 1998.	
	- BS6173	- Installation of Catering Appliances.
	- BS5440	- 1 & 2 Installation Flueing & Ventilation.
Ireland:	- IS 820	- Non - Domestic Gas Installations.

Installations must be carried out by qualified persons only. Failure to install equipment to the relevant codes and manufacturer's specifications shown in this section will void the warranty.

Components having adjustments protected (e.g. paint sealed) by the manufacturer are only to be adjusted by an authorised service agent. They are not to be adjusted by the installation person.

Unpacking

- Remove all packaging and transit protection from appliance including all protective plastic coating from exterior stainless steel panels.
- Check equipment and parts for damage. Report any damage immediately to carrier and distributor.
- Ensure 2 front adjustable feet and rear rollers are securely fitted.
- Report any deficiencies to distributor who supplied appliance.
- Check available gas supply is correct to as shown on rating plate located behind front control panel and on inner face of right hand panel.

Location

1. Installation must allow for a sufficient flow of fresh air for combustion air supply.
2. Installation must include adequate ventilation means, to prevent dangerous build up of combustion products.

Combustion Air Requirements:				
	GP513	**GP514**	**GP516**	**GP518**
Natural Gas	10.5m^3/hr	14m^3/hr	21m^3/hr	28m^3/hr
LPG / Butane	11m^3/hr	15m^3/hr	22m^3/hr	29m^3/hr
Town Gas	10.5m^3/hr	14m^3/hr	21m^3/hr	28m^3/hr

3. Any gas burning appliance requires adequate clearance and ventilation for optimum and trouble-free operation. Minimum installation clearances shown overleaf are to be adhered to.
4. Position appliance in its approximate working position.
5. All air for burner combustion is supplied from beneath unit. Legs must always be fitted and no obstructions placed beneath or around base of unit, as obstructions will cause incorrect operation and / or failure of appliance.
6. Components having adjustments protected (e.g. paint sealed) by manufacturer are only to be adjusted by an authorised service agent. They are not to be adjusted by the installation person.

NOTE: Do not obstruct or block appliances flue. Never directly connect a ventilation system to appliance flue outlet.

KW COMMERCIAL KITCHEN
Distributed by KW Commercial Kitchen | 1300 001 366
www.kwcommercial.com.au | sales@kwcommercial.com.au

Clearances

NOTE: Only non-combustible materials can be used in close proximity to this appliance.

Any gas burning appliance requires adequate clearance and ventilation for optimum and trouble-free operation. The following minimum installation clearances are to be adhered to:

	Combustible Surface	Non Combustible Surface
Left / Right Hand Side	50mm	0mm
Rear	50mm	0mm

Assembly

NOTE:

- **All Models are delivered completely assembled. No further assembly is required.**
- **This appliance is fitted with adjustable feet to enable appliance to be positioned securely and level. This should be carried out on completion of gas connection. Refer to 'Gas Connection' section.**

Optional Accessories (Refer to Replacement Parts List)

- Plinth Kit. For installation details, refer to instructions supplied with each kit.

Gas Connection

NOTE: ALL GAS FITTING MUST ONLY BE CARRIED OUT BY AN QUALIFIED PERSON.

1. Blue Seal Gas Griddles do not require an electrical connection, as they function totally on gas supply only.
2. It is essential that gas supply is correct for appliance to be installed and that adequate supply pressure and volume is available. The following checks should be made before installation:-

   a. **Gas Type** the appliance has been supplied for is shown on coloured stickers located above gas connection and on rating plate. Check that this is correct for gas supply, appliance is being installed for. Gas conversion procedure is detailed in this manual.

   b. **Supply Pressure** required for this appliance is shown in 'Specifications' section of this manual. Check gas supply to ensure adequate supply pressure exists.

   c. **Input Rate** of this appliance is shown on Rating Plate, refer to 'Dimensions' section for rating plate locations for different models. Input rate should be checked against available gas supply line capacity. **Particular note should be taken if appliance is being added to an existing installation.**

Fig 1

NOTE: It is important that adequately sized piping runs directly to connection joint on appliance with as few tees and elbows as possible to give maximum supply volume.

3. Fit gas regulator supplied, into gas supply line as close to appliance as possible.

NOTE: Gas pressure regulator provided with this appliance is convertible between Natural Gas and LPG as per 'Gas Conversion Section' in this manual.
Ensure regulator is converted to correct gas type that appliance will operate on.
Regulator outlet pressure is fixed ex-factory for gas type that regulator is converted to and it is <u>NOT to be adjusted</u>.

Regulator connections are $^{3}/_{4}$" BSP female.
Connection to appliance is $^{3}/_{4}$" BSP male.
(Refer to 'Specifications' section for gas supply location dimensions).

NOTE: A Manual Isolation Valve must be fitted to individual appliance supply line.

KW COMMERCIAL KITCHEN
Distributed by KW Commercial Kitchen | 1300 001 366
www.kwcommercial.com.au | sales@kwcommercial.com.au

4. Correctly locate appliance into its final operating position and using a spirit level, adjust legs so that unit is level and at correct height.
5. Connect gas supply to appliance. A suitable jointing compound which resists breakdown action of LPG must be used on every gas line connection, unless compression fittings are used.
6. Check all gas connections for leakages using soapy water or other gas detecting equipment.

Warning

DO NOT USE A NAKED FLAME TO CHECK FOR GAS LEAKAGES.

7. Check that the gas operating pressure is as shown in the 'Specifications' section.

NOTE: Measure burner operating pressure at the test point outlet with one griddle burner operating at the 'High Flame' setting. Operating pressure is ex-factory set, through appliance regulator and not to be adjusted, apart from when carrying out gas conversion, if required. (Refer to the 'Gas Conversion' section for details).

8. Verify operating pressure remains correct.

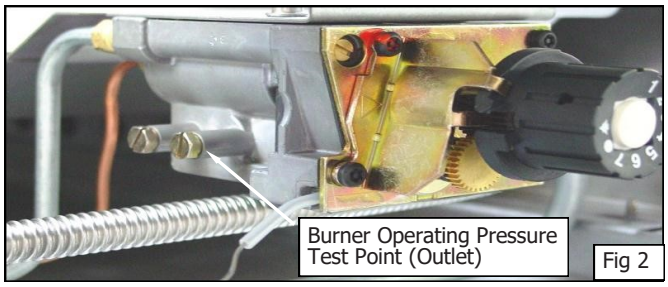

Fig 2

Commissioning

1. Before leaving the new installation;
   a. Check the following functions in accordance with operating instructions specified in 'Operation' section of this manual.
      - Light the Pilot Burner.
      - Light the Main Burner.
      - Turning 'Off' the Main Burner / Pilot.

   b. Ensure operator has been instructed in areas of correct lighting, operation, and shutdown procedure for appliance.
2. This manual must be kept by the owner for future reference and a record of ***Date of Purchase, Date of Installation*** and ***Serial Number of Appliance*** must be recorded and kept with this manual. **(These details can be found on Rating Plate, refer to 'Dimensions' section for locations of Rating Plate for different applications. Also refer to 'Gas Connection' section)**.

NOTE: If it is not possible to get appliance to operate correctly, shut 'Off' gas supply and contact appliance supplier.

For Refrigeration Cabinet Installation, refer to Refrigeration Cabinet Installation and Operation Manual supplied with appliance.

KW COMMERCIAL KITCHEN
Distributed by KW Commercial Kitchen | 1300 001 366
www.kwcommercial.com.au | sales@kwcommercial.com.au

Operation Guide

Caution

- **This appliance is for professional use and is only to be used by qualified persons.**
- **Only authorised service persons are to carry out installation, servicing or gas conversion operations.**
- **Components having adjustments protected (e.g. paint sealed) by the manufacturer should not be adjusted by the user / operator.**

1. Blue Seal Gas Griddles have been designed to provide simplicity of operation and 100% safety protection.
2. Improper operation is almost impossible, however bad operation practices can reduce the life of the gas griddle and produce a poor quality product. To use this appliance correctly please read the following sections carefully:-

    - Lighting the Pilot Burner.
    - Lighting the Main Burner.
    - Turning 'Off' the Main Burner / Pilot.

Description of Controls

Fig 3

Gas Griddle Controls

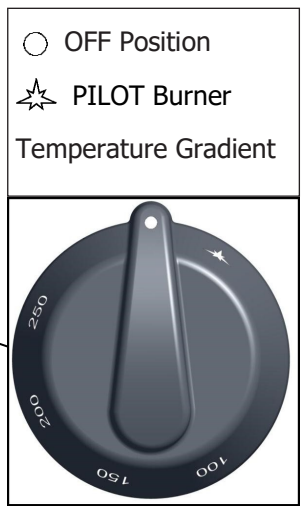

Piezo Igniter with Viewing Hole

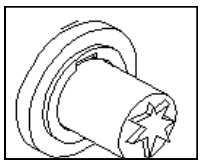

Distributed by KW Commercial Kitchen | 1300 001 366
www.kwcommercial.com.au | sales@kwcommercial.com.au

Lighting Pilot Burner

! IMPORTANT

Always ensure that the grease tray is emptied regularly and never allow the grease tray to overflow.

These griddles are fitted with a pilot as a standard option and flame failure protection, which is incorporated for each main burner, by way of a thermo-electric system. Flame failure protection will shut 'Off' gas supply to that burner in the event that pilot for that burner goes out, so that un-burnt gas is not expelled.

1. Partially depress gas control knob whilst turning anti-clockwise to 'Pilot' position. **DO NOT fully depress Gas Control Knob whilst trying to rotate anti-clockwise as Knob and Gas Valve will be damaged.**
2. With gas control knob in 'Pilot' position, keep knob depressed whilst pressing piezo igniter button. (Each press of piezo igniter button will generate a single spark).
3. Hold gas control knob depressed for approx. 10-15 seconds, then release. Pilot burner should remain alight. (If pilot does not light, repeat Items 1 to 3 above).
4. Pilot ignition can be viewed through opening in plastic surround of piezo igniter button.

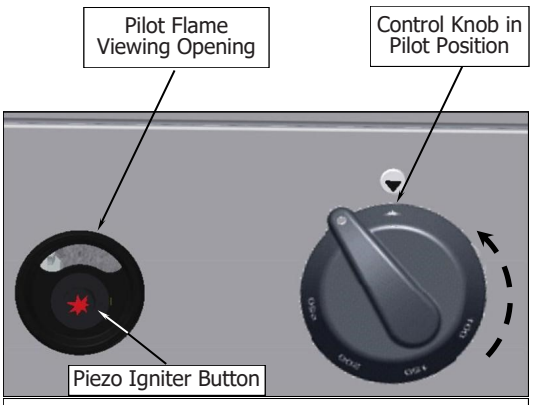

Depress and Rotate Anti-Clockwise to Pilot Position

NOTE: If pilot burner goes out during normal operation wait 5 minutes before re-lighting.

Lighting Main Burner

1. Ensure pilot burner is alight.
2. Rotate gas control knob anti-clockwise to desired temperature marked on knob.
3. Main burner will ignite automatically, from pilot burner.

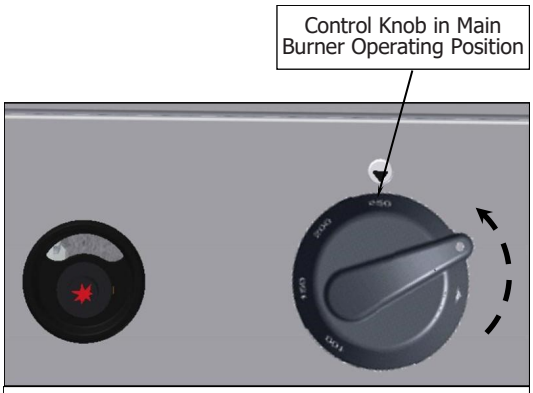

Rotate Anti-Clockwise to Operating Temperature

Turning 'Off' Main Burner / Pilot

NOTE: DO NOT attempt to rotate Gas Control Knob anti-clockwise back to 'Off' position as Knob and Gas Valve will be damaged.

1. Rotate gas control knob clockwise to 'Pilot' position. Main burner will extinguish and pilot burner will remain alight.
2. To turn 'Off' main burner completely, ***partially depress*** gas control knob whilst turning clockwise to the 'O' Off position, pilot burner will extinguish. **DO NOT fully depress Gas Control Knob whilst trying to rotate clockwise to 'Off' position as Knob and Gas Valve will be damaged.**

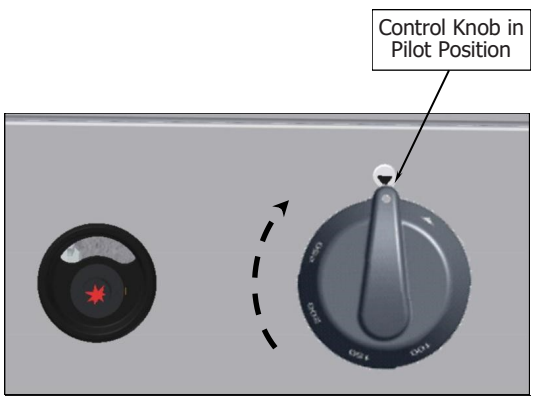

Rotate Clockwise to Pilot Position - Then Partially Depress and Rotate to 'O' Off Position.

KW COMMERCIAL KITCHEN
Distributed by KW Commercial Kitchen | 1300 001 366
www.kwcommercial.com.au | sales@kwcommercial.com.au

Re-Setting Overtemp Device (All UK Chrome Plate and optional All Other Models).

This griddle is fitted with an overtemp device which isolates gas supply to burners should gas control system or thermostat malfunction, thus preventing griddle overheating. If pilot fails to ignite after several attempts, ensure that overtemp is checked to ensure that it has not tripped.

1. To reset overtemp, remove gas control knobs from front of griddle.
2. Slacken 2 screws securing front control panel and carefully remove control panel, ensuring that leads to piezo igniter are disconnected from rear of piezo buttons.
3. Using a small screwdriver, depress centre of overtemp reset button.
4. Re-connect piezo igniter leads to rear of piezo igniter buttons.
5. Refit front control panel and secure in position with 2 securing screws.
6. Refit gas control knobs to gas spindles.
7. Attempt to re-light pilot burners as shown above. Should pilot burners still not ignite, call a qualified service person to investigate problem.

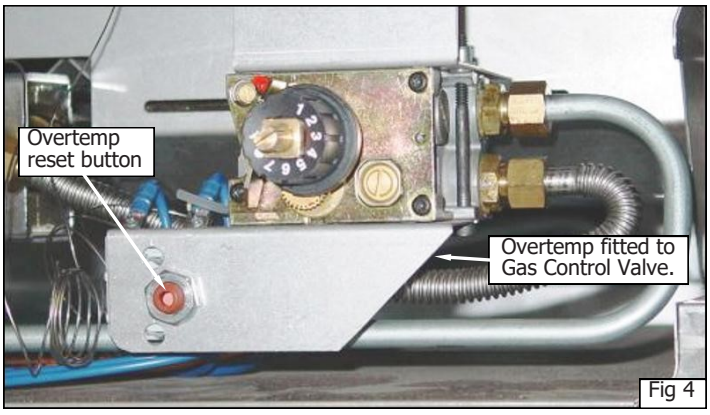

Fig 4

IMPORTANT:

Should any abnormal operation like;

- **ignition problems,**
- **abnormal burner flame,**
- **burner control problems,**
- **partial or full loss of burner flame in normal operation, be noticed, appliance requires IMMEDIATE service by a qualified service person and should not be used until such service is carried out.**

For Refrigeration Cabinet Operation refer to Refrigeration Cabinet Installation and Operation Manual supplied with appliance.

KW COMMERCIAL KITCHEN
Distributed by KW Commercial Kitchen | 1300 001 366
www.kwcommercial.com.au | sales@kwcommercial.com.au

General

Caution

Always turn 'Off' gas supply before cleaning.

This appliance is not water proof.

Do not use water jet spray to clean interior or exterior of this appliance.

Clean griddle regularly. A clean appliance looks better, will last longer and will perform better. Carbonised grease on surface or on griddle plate will hinder transfer of heat from cooking surface to food. This will result in loss of cooking efficiency.

NOTE: Each Heavy Duty Griddle is supplied with a scraper tool and a pack of blades for cleaning griddle surface.
- **1 Flat Blade (pack) - 1 Ribbed Blade (pack) and 2 handles for Ribbed Heavy Duty Griddle.**
- **1 Flat Blade (pack) and I handle for Smooth Heavy Duty Griddle.**

Warning

BLADES FITTED TO SCRAPER TOOL ARE EXTREMELY SHARP AND ARE TO BE USED WITH CARE.

NEVER use ribbed scraper blade on flat chrome surfaced griddle plate.

Replacement blades and handles can be purchased separately. Refer to 'Replacement Parts List' at rear of manual.

DO NOT use water on griddle plate while this item is still hot as warping and cracking may occur. Allow griddle plate to cool down before cleaning.

NOTE:
- **DO NOT use strong solvents, abrasive or caustic detergents as they could corrode or damage the griddle.**
- **To prevent rust forming on the griddle plate (Steel Plate), ensure that any detergent or cleaning material has been completely removed after each cleaning. The appliance should be switched 'On' briefly to ensure the griddle plate is dry. Spread oil or grease over the griddle surface to form a thin protective greasy film.**

To keep your griddle clean and operating at peak efficiency, follow procedures shown below:-

After Each Use

Caution

Always apply even pressure over whole surface of scraper tool when using on flat surface of griddle, to prevent scoring of griddle surface.

NEVER bang sharp edge of scraper tool on flat surface of griddle as this will damage the griddle and invalidate the warranty.

1. Clean griddle with supplied scraper tools to remove any food debris.
2. Always ensure scraper tool blades are changed regularly to ensure that scraper tool works efficiently and prevents damage to griddle plate surface.

KW COMMERCIAL KITCHEN
Distributed by KW Commercial Kitchen | 1300 001 366
www.kwcommercial.com.au | sales@kwcommercial.com.au

Daily Cleaning

1. Grease drawer should be checked and emptied frequently to prevent overflow and spillage. Remove grease drawer while still warm so that grease is in a liquid state. Empty any grease from drawer and wash thoroughly in same manner as any cooking utensil.
2. Clean Control Panel with a damp cloth lightly moistened with a solution of mild detergent and water.
3. Thoroughly clean splash back, interior and exterior surfaces of griddle with hot water, a detergent solution and a soft scrubbing brush.
4. Brush griddle surface with a soft bristled brush. Any carbon deposits should be removed using supplied scraper tool followed by wiping with a cloth to prevent accumulation of food deposits.
5. Dry griddle thoroughly with a dry cloth and polish with a soft dry cloth.

NOTE: <u>Chrome Griddle Plate</u>; DO NOT use strong solvents, abrasive or caustic detergents as they could corrode or damage the chrome plate.

Weekly Cleaning

NOTE:

- **If griddle usage is very high, we recommend that weekly cleaning procedure is carried out more frequently.**
- **Ensure that protective gloves are worn during cleaning.**
- **DO NOT use harsh abrasive detergents, strong solvents or caustic detergents as they will damage griddle and burners.**
- **DO NOT use water on griddle plates while they are still hot as warping may occur. Allow these items to cool and remove for cleaning.**

Griddle - Steel Plate

NOTE: To prevent rust forming on griddle plate, ensure that all detergent and cleaning material has been entirely removed after each cleaning process. Appliance should be switched 'On' briefly to ensure griddle plate becomes dry. Oil or grease should be spread over griddle surface to form a thin protective greasy film.

a. Remove and clean grease collection drawer frequently to prevent over spills.
b. Clean griddle surface thoroughly with supplied scraper tool or a wire brush. If necessary use a griddle stone or a scotch bright pad on griddle surface for removal of stubborn or accumulated carbon deposits..
c. Occasionally bleach griddle plate with vinegar when plate is cold.
d. Clean with hot water, a mild detergent solution and a scrubbing brush. Dry all components thoroughly with a dry cloth.
e. Griddle should be switched 'On' briefly to ensure that griddle plate becomes dry. A thin smear of cooking oil should be spread over griddle to form a protective film.

Griddle - Chrome Plate

Caution

Always apply even pressure over whole surface of scraper tool when using on flat surface of griddle, to prevent scoring of griddle surface.

<u>NEVER bang sharp edge of scraper tool on flat surface of griddle as this will damage griddle and invalidate the warranty.</u>

NOTE: To maintain the finish on the chrome griddle plate, ensure that all detergent and cleaning material has been entirely removed after each cleaning process. Appliance should be switched 'On' briefly to ensure griddle plate becomes dry.

a. Remove and clean grease collection drawer frequently to prevent over spills.
b. Clean griddle surface thoroughly with supplied scraper tool.
c. Allow plate to cool, then clean with a scrubbing brush, a mild non-abrasive detergent and water.
d. Occasionally bleach plate with vinegar when cold.
e. Dry griddle thoroughly with a dry cloth and polish with a soft dry cloth.
f. Griddle should be switched 'On' briefly to ensure that griddle plate becomes dry.

KW COMMERCIAL KITCHEN
Distributed by KW Commercial Kitchen | 1300 001 366
www.kwcommercial.com.au | sales@kwcommercial.com.au

Griddle Cooking Area

a. Clean griddle cooking area with a soft cloth and a mild detergent and hot water solution.
b. Baked on deposits or discolouration may require a good quality stainless steel cleaner or stainless steel wool. Always apply cleaner when appliance is cold and rub in direction of grain.
c. Remove grease drawer and clean with a mild anti bacterial detergent and hot water solution using a soft bristled brush. Dry grease drawer thoroughly with a dry cloth.

Stainless Steel Surfaces

a. Clean exterior surfaces of griddle with hot water, a mild detergent solution and a soft scrubbing brush. Note that gas control knobs are a push fit onto gas control valve spindles and can be removed when cleaning control panel.
b. Baked on deposits or discolouration may require a good quality stainless steel cleaner or stainless steel wool. Always apply cleaner when appliance is cold and rub in direction of grain.
c. To remove any discolouration, use an approved stainless steel cleaner or stainless steel wool. Always rub in direction of grain.
d. Remove grease tray and clean with a mild anti bacterial detergent and hot water solution using a soft bristled brush.
e. Dry grease tray thoroughly with a dry cloth.
f. Dry all components thoroughly with a dry cloth and polish with a soft dry cloth.

Periodic Maintenance

NOTE: All maintenance operations should only be carried out by a qualified service person.

To achieve the best results cleaning must be regular and thorough and all controls and mechanical parts should be checked and adjusted periodically by a qualified service person. If any small faults occur, have them attended to promptly. Don't wait until they cause a complete breakdown. It is recommended that the appliance is serviced every 6 months.

For Refrigeration Cabinet Cleaning and Maintenance refer to Refrigeration Cabinet Installation and Operation Manual supplied with appliance.

KW COMMERCIAL KITCHEN
Distributed by KW Commercial Kitchen | 1300 001 366
www.kwcommercial.com.au | sales@kwcommercial.com.au

This section provides an easy reference guide to the more common problems that may occur during the operation of your equipment. The fault finding guide in this section is intended to help you correct, or at least accurately diagnose problems with your equipment.

Although this section covers the most common problems reported, you may encounter a problem not covered in this section. In such instances, please contact your local authorised service agent who will make every effort to help you identify and resolve the problem. Please note that the service agent will require the following information:-

- **The Model Trade Name and Serial Number of the Appliance. Both can be found on the Rating Plate located on the appliance. (Refer to 'Dimensions' section).**

Fault	Possible Cause	Remedy
Pilot won't light.	No gas supply.	Ensure gas isolation valve is turned 'On', and bottles are not empty.
	Blocked pilot injector.	Call service provider.
Pilot goes out when gas control knob released.	Releasing knob before thermocouple has heated.	Hold knob in for at least 20 seconds following ignition of pilot.
	Pilot flame too small. - Gas pressure too low. - Partially blocked pilot injector.	Call service provider.
	Thermocouple faulty.	Call service provider.
Main burner will not light.	Incorrect supply pressure.	Call service provider.
	Faulty gas control.	Call service provider.

NOTE: Components having adjustments protected (e.g. paint sealed) by the manufacturer, are only to be adjusted by an authorised service agent. They are not to be adjusted by an unqualified service person.

For Refrigeration Cabinet Fault Finding details, refer to Refrigeration Cabinet Installation and Operation Manual supplied with appliance.

KW COMMERCIAL KITCHEN
Distributed by KW Commercial Kitchen | 1300 001 366
www.kwcommercial.com.au | sales@kwcommercial.com.au

Conversion Procedure

Caution

Ensure Appliance is isolated from gas supply before commencing servicing.

NOTE:

- **These conversions should only be carried out by qualified persons. All connections must be checked for leaks before re-commissioning appliance.**
- **Adjustment of components that have adjustments / settings sealed (e.g. paint sealed) can only be adjusted in accordance with following instructions and shell be re-sealed before re -commissioning this appliance.**
- **For all relevant gas specifications refer to 'Gas Specifications' table at end of this section.**

Main Burners

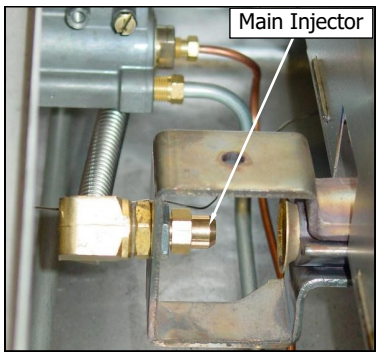

1. Remove the following:-
   - Gas control knobs.
   - Control Panel.
   - Disconnect electrical connection lead from rear of piezo igniters.
2. Remove main burner injectors and replace with correct size injectors as shown in 'Gas Specifications Tables' at rear of this section.

Pilot Burners

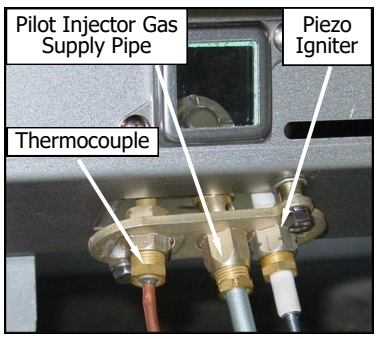

1. Carry out the following:-
   - Lead to piezo igniter.
   - Unscrew and remove piezo igniter.
   - Slacken gas supply tube at gas control end.
   - Disconnect gas supply tube to pilot burner.
2. Remove pilot injectors and replace with correct size injectors as shown in 'Gas Specifications Tables' at rear of this section.
3. Reconnect the following:-
   - Gas supply tube to pilot burner.
   - Tighten gas supply tube at gas control end.
   - Refit piezo igniter.
   - Re-connect lead to piezo igniter.

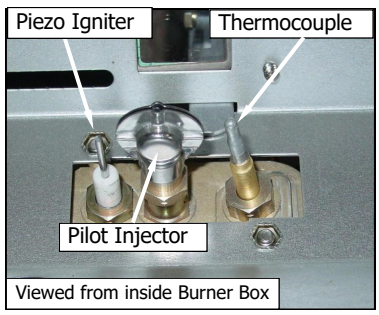

Low Fire Adjustment - (Gas Griddle)

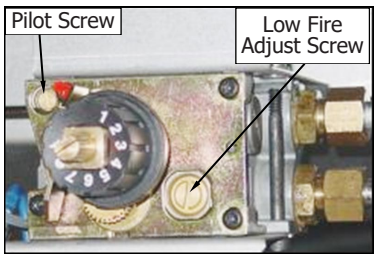

To change gas griddle thermostat 'Low Fire' adjustment, low fire screw on gas control valve should be screwed fully in, then un-screwed by 1 full turn as shown in 'Gas Specifications' table at end of this section.

1. Screw 'Low Fire' screw fully 'IN' and then unscrew by **1 Full Turn** of 'Low Fire' screw. (Refer to 'Gas Specification' table at rear of this section).
2. Ensure Gas Control Pilot Screw is adjusted to 3 turns out c.c.w.
3. Refit control panel
4. Refit gas control knob.

NOTE: 'Low Fire Screw' should be sealed with coloured paint on completion of low fire adjustment.

KW COMMERCIAL KITCHEN
Distributed by KW Commercial Kitchen | 1300 001 366
www.kwcommercial.com.au | sales@kwcommercial.com.au

Gas Regulator

NOTE: Gas regulator supplied is convertible between Natural Gas and LP Gas, but it's outlet pressure is fixed ex-factory and is NOT to be adjusted.

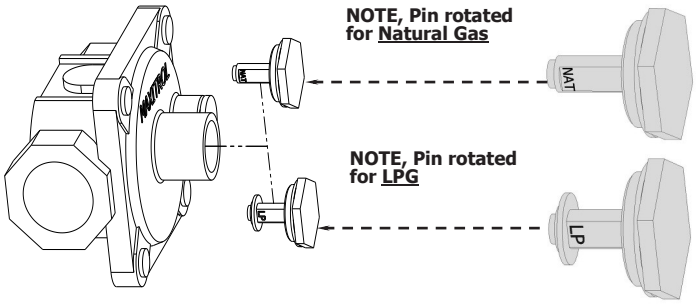

- Town Gas Only.

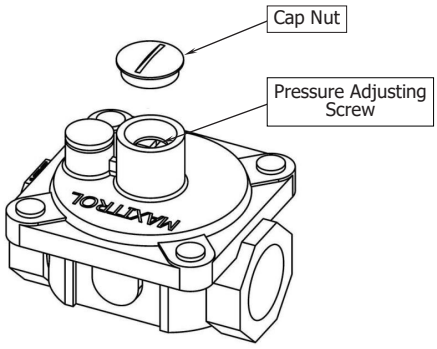

1. Remove slotted cap from regulator.
2. Turn 'On' gas supply and appliance.
3. Adjust pressure adjusting screw to achieve correct burner operating pressure.

NOTE: Measure burner operating pressure at gas valve outlet test point with burner operating at 'High Flame' setting.

4. Verify operating pressure remains correct (Re-adjust regulator if required).
5. Screw cap nut back onto regulator.

Gas Type Labels

On completion of gas conversion, replace gas type labels located at:-
- Rear of unit, above gas connection.
- Beside rating plate.

Commissioning

Before leaving installation;

1. Check all gas connections for leakage using soapy water or other gas detecting equipment.

Warning

DO NOT USE A NAKED FLAME TO CHECK FOR GAS LEAKAGES.

2. Carry out a 'Commissioning' check of appliance as shown in Installation Section of this manual.
3. Ensure any adjustments done to components that have adjustments / settings paint sealed are to be re-sealed.

NOTE: If it is not possible to get the appliance to operate correctly, shut off the gas supply and contact the supplier of this appliance.

KW COMMERCIAL KITCHEN
Distributed by KW Commercial Kitchen | 1300 001 366
www.kwcommercial.com.au | sales@kwcommercial.com.au

Gas Specifications

- Australia

	Natural Gas				LP Gas (Propane)			
	GP513	GP514	GP516	GP518	GP513	GP514	GP516	GP518
Main Burner Injector	3.00mm	3.60mm	3.00mm	2.85mm	1.80mm	2.10mm	1.80mm	1.70mm
Pilot Burner Injector	0.41				0.25			
Low Fire Adjustment	1 Turn 'Out' c.c.w.							
High Fire Adjustment (*)	Maximum Flow Screw. Fully In c.w.							
Burner Operating Pressure (**)	0.90 kPa	0.85 kPa	0.90 kPa		2.6 kPa	2.5 kPa	2.6 kPa	
Supply Pressure	1.13 - 3.40 kPa				2.75 - 4.50 kPa			
Gas Regulator Cap Screw								

- New Zealand

	Natural Gas				LP Gas			
	GP513	GP514	GP516	GP518	GP513	GP514	GP516	GP518
Main Burner Injector	3.00mm	3.60mm	3.00mm	2.85mm	1.80mm	2.10mm	1.80mm	1.70mm
Pilot Burner Injector	0.41				0.25			
Low Fire Adjustment	1 Turn 'Out' c.c.w.							
High Fire Adjustment (*)	Maximum Flow Screw. Fully In c.w.							
Burner Operating Pressure (**)	0.90 kPa	0.85 kPa	0.90 kPa		2.6 kPa	2.5 kPa	2.6 kPa	
Supply Pressure	1.13 - 3.40 kPa				2.75 - 4.50 kPa			
Gas Regulator Cap Screw								

(*) Gas Control Valve is fitted with a non adjustable maximum flow bypass blanking screw.

(**) Measure burner operating pressure at the gas control valve outlet test point with burner operating at 'High' setting. Operating pressure is ex-factory set, through appliance regulator and is not to be adjusted, apart from when carrying out gas conversion, if required. (Refer to 'Gas Conversion' information in this section for details).

KW COMMERCIAL KITCHEN
Distributed by KW Commercial Kitchen | 1300 001 366
www.kwcommercial.com.au | sales@kwcommercial.com.au

- United Kingdom & EU (CE)

Category: **II_{2H3P} (20, 37), .$II_{2H3B/P}$ (20, 28-30),**
Flue Type: **A_1.**

	Natural Gas (G20)				Propane (G31)			
	GP513	GP514	GP516	GP518	GP513	GP514	GP516	GP518
Main Burner Injector	3.00mm	3.40mm	3.00mm	2.85mm	1.80mm	2.10mm	1.80mm	1.70mm
Pilot Burner Injector	0.41				0.25			
Low Fire Adjustment	1 Turn 'Out' c.c.w.							
High Fire Adjustment (*)	Maximum Flow Screw. Fully In c.w.							
Burner Operating Pressure (**)	8.2 mbar	8.5 mbar	8.2 mbar		26 mbar			
Supply Pressure	20 mbar				37 mbar			
Gas Regulator Cap Screw								

	LP Gas (G30 - G31)			
	GP513	GP514	GP516	GP518
Main Burner Injector	1.80mm	2.10mm	1.80mm	1.70mm
Pilot Burner Injector	0.25			
Low Fire Adjustment	1 Turn 'Out' c.c.w.			
High Fire Adjustment (*)	Maximum Flow Screw. Fully In c.w.			
Burner Operating Pressure (**)	26 mbar			
Supply Pressure	28 - 30 mbar			
Gas Regulator Cap Screw				

(*) Gas Control Valve is fitted with a non adjustable maximum flow bypass blanking screw.

(**) Measure burner operating pressure at the gas control valve outlet test point with burner operating at 'High' setting. Operating pressure is ex-factory set, through appliance regulator and is not to be adjusted, apart from when carrying out gas conversion, if required. (Refer to 'Gas Conversion' information in this section for details).

KW COMMERCIAL KITCHEN
Distributed by KW Commercial Kitchen | 1300 001 366
www.kwcommercial.com.au | sales@kwcommercial.com.au

- All Other Markets

	Natural Gas				Town Gas (**)			
	GP513	GP514	GP516	GP518	GP513	GP514 (***)	GP516	GP518
Main Burner Injector	3.00	3.60	3.00	2.85	5.50	7.20	5.50	5.20
Pilot Burner Injector	0.41				0.75			
Low Fire Adjustment	1 Full Turn Counter Clockwise from the 'Fully In' Position.							
High Fire Adjustment	Maximum Flow Screw. 'Fully In' c.w.							
Burner Operating Pressure (*)	0.82 kPa	0.85 kPa	0.90 kPa		0.45 kPa			
Supply Pressure	1.13 - 3.40 kPa				0.75 - 1.50 kPa			
Gas Regulator Cap Screw					Adjustable Regulator *(Adjust to the Burner Operating* Pressure specified).			

	LP Gas (Propane)				Butane			
	GP513	GP514	GP516	GP518	GP513	GP514	GP516	GP518
Main Burner Injector	1.80	2.10	1.80	1.70	1.65	1.95	1.65	1.55
Pilot Burner Injector	0.25				0.25			
Low Fire Adjustment	1 Full Turn Counter Clockwise from the 'Fully In' Position.							
High Fire Adjustment	Maximum Flow Screw. 'Fully In' c.w.							
Burner Operating Pressure (*)	2.6 kPa	2.5 kPa	2.6 kPa		2.6 kPa	2.5 kPa	2.6 kPa	
Supply Pressure	2.75 - 4.50 kPa							
Gas Regulator Cap Screw								

NOTE:

- **(*) Measure burner operating pressure at gas valve outlet test point with burner operating at 'High' setting.**
- **NAT, LPG & Butane Only - Operating pressure is ex-factory set and is not to be adjusted, unless when converting between gases, if required.**
- **TOWN GAS (**) Only - Adjust burner operating pressure using adjustable gas regulator supplied.**
- **Refer to the information in this section for further details.**
- **(***) - GP514 Town Gas model is available ex-factory on request only.**

KW COMMERCIAL KITCHEN
Distributed by KW Commercial Kitchen | 1300 001 366
www.kwcommercial.com.au | sales@kwcommercial.com.au

Replacement Parts List

IMPORTANT:

Only genuine authorized replacement parts should be used for servicing and repair of this appliance. Instructions supplied with parts should be followed when replacing components.

For further information and servicing instructions, contact your nearest authorized service branch (contact details are as shown on reverse of front cover of this manual).

When ordering replacement parts, please quote part number and description as listed below. If part required is not listed below, request part by description and quote model number and serial number which is shown on rating plate.

Controls

228041	Burner 450 / 900 / 1200mm L/Hand	(GP513 / GP516 / GP518).
227444	Burner 600mm	(GP514).
227443	Burner 900 / 1200mm R/Hand	(GP516 / GP518).
019464K	Pilot Burner Kit	
229407	Overtemp 365°C Millivolt.	(UK Chrome Plate).
236265	Thermocouple Interrupted - Leaded	(if Overtemp fitted).
019218	Thermocouple	(if No Overtemp fitted).
227508	Piezo Igniter.	
228010	Piezo Housing.	
229731	Piezo HT Lead 250mm.	
019624	Electrode.	
230416	Eurosit Gas Control Kit.	
235496	Knob Adaptor Eurosit.	
227381	Gas Control Knob - 100°C to 290°C.	

032360	Main Injector (Nat Gas)	Ø 3.60mm	(GP514).
032300	Main Injector (Nat Gas)	Ø 3.00mm	(GP513 / GP516).
032285	Main Injector (Nat Gas)	Ø 2.85mm	(GP518).
032210	Main Injector (LPG)	Ø 2.10mm	(GP514).
032180	Main Injector (LPG)	Ø 1.80mm	(GP513 / GP516).
032170	Main Injector (LPG)	Ø 1.70mm	(GP518).
032195	Main Injector (Butane)	Ø 1.95mm	(GP514).
032165	Main Injector (Butane)	Ø 1.65mm	(GP513 / GP516).
032155	Main Injector (Butane)	Ø 1.55mm	(GP518).
038720	Main Injector (Town Gas)	Ø 7.20mm	(GP514).
032550	Main Injector (Town Gas)	Ø 5.50mm	(GP513 / GP516).
032520	Main Injector (Town Gas)	Ø 5.20mm	(GP518).
019593	Pilot Injector (Nat Gas)	0.41.	
019594	Pilot Injector (LPG / Butane)	0.25.	
026393	Pilot Injector (Town Gas)	0.75.	

General

228400	Grease Drawer (GP514 / GP516 / GP518).	
236813	Grease Drawer (GP513).	
227850	Leg 150mm (Adjustable) (Flush Stud)	- CB and RB Models.
227851	Leg 150mm (Adjustable) (Extended Stud)	- LS Models.
227855	Leg 80mm	- B Models.
229674	Rear Roller Assy	- CB and LS Models.
232351	Rear Roller Assy (135)	- RB Models.

KW COMMERCIAL KITCHEN
Distributed by KW Commercial Kitchen | 1300 001 366
www.kwcommercial.com.au | sales@kwcommercial.com.au

Gas Conversion Kits

Models	Gas Type to Convert to					
	Nat. Gas	LPG (Propane)	LPG (Butane)	Town Gas	Nat. Gas (UK)	Propane (UK)
GP513	236779	236778	236780	236781	236779	236778
GP514	232029	232028	232030	232031	232025	232024
GP516	232033	232032	232034	232035	232033	232032
GP518	232037	232036	232038	232039	232037	232036

(*) - GP514 Town Gas model is available ex-factory on request only.

Griddle Plate Options

Griddle Plate	Standard	Chromed-(C)	Ribbed & Chromed Options
450mm	236715	236750 (No Ribbing)	Standard - Ribbed as required.
600mm	228584	228157	ON REQUEST (depending on ribbed section width on LH or RH side.
900mm	228585	227641	
1200mm	228586	227650	

Gas Regulators

Gas Type	Gas Regulators	
	Part No.	Description
Nat. Gas **LPG** **Butane**	228531	¾" BSP F/F Convertible.
Town Gas	230185	¾" BSP F/F Adjustable.

Accessories

228566	Griddle Scraper Tool.	
228567	Smooth Plate Scraper Blades	(Pack of 2 Blades).
233817	Ribbed Plate Scraper Blade	(Individual Blade).
234792	450mm Plinth Kit	(LS and CB Models only).
228795	600mm Plinth Kit	(LS and CB Models only).
228799	900mm Plinth Kit	(LS and CB Models only).
228803	1200mm Plinth Kit	(LS and CB Models only).
228801	Refrigeration Base - 900mm Plinth Kit	(RB Models only).
228805	Refrigeration Base - 1200mm Plinth Kit	(RB Models only).

For the Refrigeration Cabinet Replacement Parts refer to the Refrigeration Cabinet Installation and Operation Manual supplied with the appliance.

KW COMMERCIAL KITCHEN
Distributed by KW Commercial Kitchen | 1300 001 366
www.kwcommercial.com.au | sales@kwcommercial.com.au