PRODUCT DOCUMENT PACK

Prepared and distributed by KW Commercial Kitchen

PRODUCT

Blue Seal Evolution Series IN514R3-LS 900mm Induction Cooktops - Leg Stand

Model / SKU: IN514R3-LS

KW COMMERCIAL KITCHEN

7/72 Canterbury Road, Bankstown NSW 2200

Phone 1300 001 366

Email sales@kwcommercial.com.au

Web www.kwcommercial.com.au

Scan for the current KW product page

DOCUMENT NOTICE

The supplier document begins on the next page. KW contact branding is added in a separate footer area and does not replace the supplier's instructions, specifications or warranty terms.

Official supplier source: https://moffat.global.ssl.fastly.net/sites/default/files/products/cutsheet/IN514R_X_DS_AN.pdf

BLUE SEAL EVOLUTION SERIES®

Technical data sheet for

INDUCTION COOKTOP **900mm**

- ROUND INDUCTION ZONE

IN514R3-B, IN514R3-LS, IN514R3-CB, IN514R5-B, IN514R5-LS, IN514R5-CB

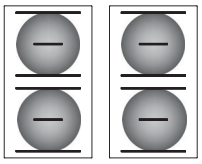

IN514R5-LS

IN514-B

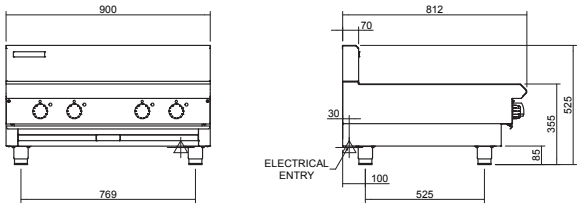

IN514-LS

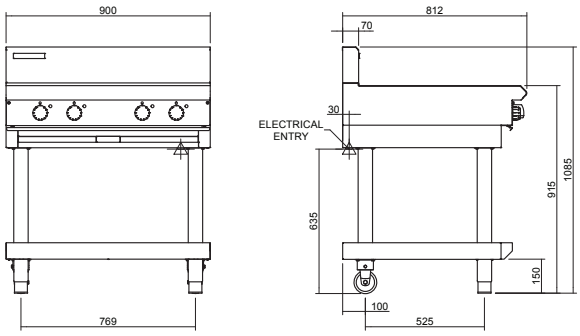

IN514-CB

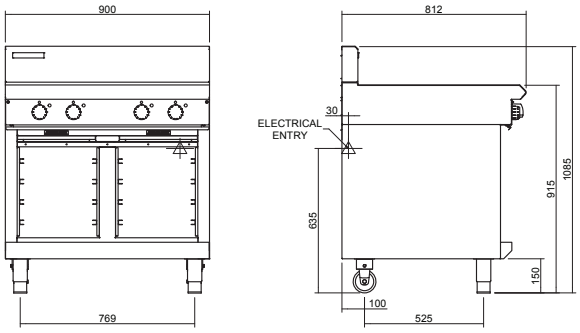

IN514R3, IN514R5

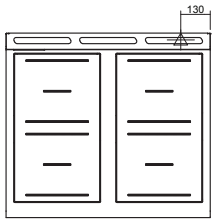

SPECIFICATIONS

Cooktop
4 x 3.5kW induction zones
or
4 x 5.0kW induction zones
Ø 270mm induction zones

Electrical requirements
IN514R3
14kW, 400-415V, 50/60Hz, 3P+E
20A / phase
IN514R5
20kW, 400-415V, 50/60Hz, 3P+E
28A / phase

Dimensions
Bench model
Width 900mm
Depth 812mm
Height 355mm
Incl. splashback 525mm
All models (excluding Bench model)
Width 900mm
Depth 812mm
Height 915mm
Incl. splashback 1085mm

Nett weight
105kg

Packing data
1.03m3, 157kg
Width 945mm
Depth 865mm
Height 1255mm

Options
Castors
Plinth mounting

Induction Zone Options
R3 - 3.5kW round induction
R5 - 5kW round induction

MOFFAT

Australia **moffat.com.au**
New Zealand **moffat.co.nz**

In line with policy to continually develop and improve its products, Moffat Limited reserves the right to change specifications and design without notice.

ISO9001 Quality Management Standard

© Copyright Moffat Ltd AN.BSE.01.2023

an Ali Group Company

The Spirit of Excellence