# PRODUCT DOCUMENT PACK

Prepared and distributed by KW Commercial Kitchen

## PRODUCT

## Blue Seal Evolution Series IN514R3-LS 900mm Induction Cooktops - Leg Stand

## Model / SKU: IN514R3-LS


### KW COMMERCIAL KITCHEN

7/72 Canterbury Road, Bankstown NSW 2200

Phone 1300 001 366

Email sales@kwcommercial.com.au

Web www.kwcommercial.com.au


Scan for the current KW product page

### DOCUMENT NOTICE

The supplier document begins on the next page. KW contact branding is added in a separate footer area and does not replace the supplier's instructions, specifications or warranty terms.

Official supplier source: https://moffat.global.ssl.fastly.net/sites/default/files/products/specification/IN514R_X_AN.pdf

# INDUCTION COOKTOP **900mm**

## - ROUND INDUCTION ZONE

IN514R3-B, IN514R3-LS, IN514R3-CB, IN514R5-B, IN514R5-LS, IN514R5-CB

- Heavy-duty construction
- Four 270mm .dia round induction zones
- 3.5kW or 5kW heating per zone
- Automatic pan detection switches induction zone off when pan removed
- 3 models of base unit
- Stainless steel exterior
- Easy clean
- Easy service
- Fully modular

IN514R5-LS

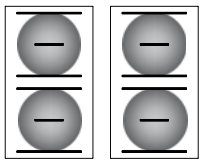

**Induction Zone Options**
R3 - 3.5kW round induction
R5 - 5kW round induction

### Overall Construction

**Cooktop**
- Welded hob with 2.0mm stainless steel hob top
- Splashback and side panels 1.2mm stainless steel
- Front panels 0.9mm stainless steel
- 6mm thick ceramic glass cooking surface

**Bench mount (supplied as – B model)**
- Four 63mm dia. heavy-duty 1.2mm 304 stainless steel bench legs with adjustable feet
- Adjustable height 80mm – 105mm

**Leg stand (supplied as – LS model)**
- Fully modular for matched suite finish
- Framed top for connection to Cooktop
- 63mm dia. heavy-duty 1.2mm 304 stainless steel legs with two adjustable feet at front and two rollers at rear
- Fully modular framed stand shelf with 0.9mm 304 stainless steel finish
- Quick assembly design

**Cabinet base (supplied as – CB model)**
- Fully modular for match suite finish
- Double skin 0.9mm 304 stainless steel interior and exterior
- 63mm dia. heavy-duty 1.2mm 304 stainless steel legs with two adjustable feet at front and two rollers at rear

### Controls
- Large easy use control knob
- Infinitely variable power controls for each induction zone
- Heating ON indicator lights (green) including pan detection indication
- Error mode indicator light (green)

### Cleaning and Servicing
- All models with easy clean stainless steel external finish
- Fully sealed cooking surface
- Removable full stainless steel air intake filters (induction cooling)
- Front service access

BLUE SEAL EVOLUTION SERIES®

# INDUCTION COOKTOP **900mm**

## - ROUND INDUCTION ZONE

IN514R3-B, IN514R3-LS, IN514R3-CB, IN514R5-B, IN514R5-LS, IN514R5-CB

### Specifications

**Cooktop**
4 x 3.5kW induction zones
or
4 x 5.0kW induction zones
Ø 270mm induction zones

**Electrical requirements**
IN514R3
14kW, 400-415V, 50/60Hz, 3P+E
20A / phase
IN514R5
20kW, 400-415V, 50/60Hz, 3P+E
28A / phase

**Dimensions**
Bench model
Width 900mm
Depth 812mm
Height 355mm
Incl. splashback 525mm

All models (excluding Bench model)
Width 900mm
Depth 812mm
Height 915mm
Incl. splashback 1085mm

**Nett weight**
105kg

**Packing data**
1.03m3, 157kg
Width 945mm
Depth 865mm
Height 1255mm

**Options**
Castors
Plinth mounting

IN514-B

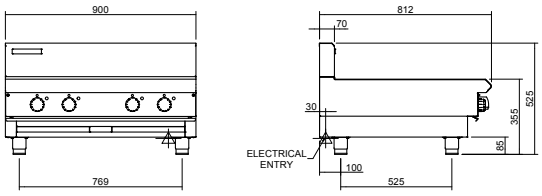


IN514-LS

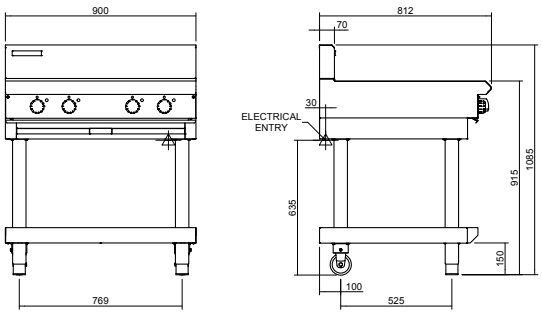


IN514-CB

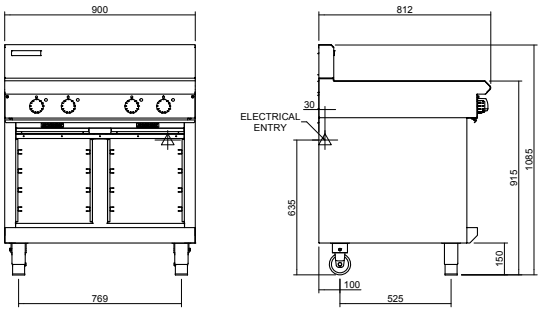


IN514R3, IN514R5

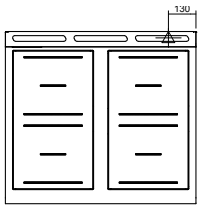



MOFFAT

moffat.com.au
moffat.co.nz

**Australia**
**moffat.com.au**

**Moffat Pty Limited**

Victoria/Tasmania
740 Springvale Road
Mulgrave, Victoria 3170
Telephone +613-9518 3888
Facsimile +613-9518 3833
vsales@moffat.com.au

New South Wales
Telephone +612-8833 4111
nswsales@moffat.com.au

South Australia
Telephone +613-9518 3888
vsales@moffat.com.au

Queensland
Telephone +617-3630 8600
qldsales@moffat.com.au

Western Australia
Telephone +618-9413 2400
wasales@moffat.com.au

**New Zealand**
**moffat.co.nz**

**Moffat Limited**

Rolleston
45 Illinois Drive
Izone Business Hub
Rolleston 7675
Telephone +64 3-983 6600
Facsimile +64 3-983 6660
sales@moffat.co.nz

Auckland
Telephone +64 9-574 3150
sales@moffat.co.nz


24:7 Service Support

ISO9001 Quality Management Standard

In line with policy to continually develop and improve its products, Moffat Limited reserves the right to change specifications and design without notice.


© Copyright Moffat Ltd

AN.BSE.01.22

an Ali Group Company

The Spirit of Excellence