PRODUCT DOCUMENT PACK

Prepared and distributed by KW Commercial Kitchen

PRODUCT

Atosa JCF80FSGR Double Door Glass Door Display Freezer – 1314mm

Model / SKU: JCF80FSGR

KW COMMERCIAL KITCHEN

7/72 Canterbury Road, Bankstown NSW 2200

Phone 1300 001 366

Email sales@kwcommercial.com.au

Web www.kwcommercial.com.au

Scan for the current KW product page

DOCUMENT NOTICE

The supplier document begins on the next page. KW contact branding is added in a separate footer area and does not replace the supplier's instructions, specifications or warranty terms.

Official supplier source: https://simcogroup.com.au/pub/media/productattach/j/c/jcf_series.pdf

GASTRONORM STORAGE REFRIGERATORS/FREEZERS– ECONOMY MODEL

WE ARE THE SPECICOOLIST!

- Dual-hinge
- Castors
- Magnetic-seal
- Stainless
- Recessed-handle
- Lock
- Shelves
- Rounded
- Cooling
- Showcase

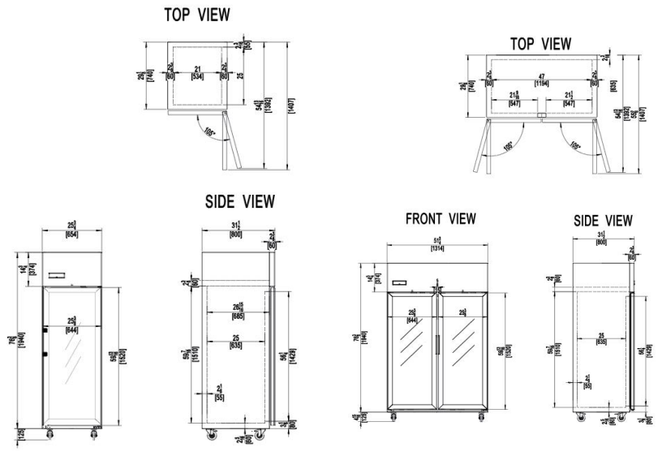

FEATURES

- *Comes with 4 wired shelves*
- *Fits GN pans*
- *Stamped side panel shelf supports for easy operation*
- *JCF40RSGR, JCF40FSGR Comes with 4 wire shelves*
- *JCF80RSGR, JCF80FSGR Comes with 8 wire shelves*
- *RRP $70.00 each*

INFORMATION	JCF40RSGR	JCF40FSGR	JCF80RSGR	JCF80FSGR
Capacity	552L	552L	1090L	1090L
Power	270W	540W	380W	800W
Voltage	220~240V/50Hz	220~240V/50Hz	220~240V/50Hz	220~240V/50Hz
Working Temp	-2°C~+8°C	-22°C~-17°C	-2°C~+8°C	-22°C~-17°C
Ambient Temp	43°C	43°C	43°C	43°C
Refrig Gas Type	R600a	R290	R600a	R290
Dimensions(mm)	W654 x D800 x H2065,130kg	W654 x D800 x H2065,130kg	W1314 x D800 x H2065,155kg	W1314 x D800 x H2065,155kg
Packaging Dimensions(mm)	W685 x D835 x H2140,158kg	W685 x D835 x H2140,158kg	W1340 x D830 x H2140,210kg	W1340 x D830 x H2140,210kg
RRP	***$3,476.00***	***$4,268.00***	***$5,346.00***	***$5,698.00***

Note: "R600a/50" indicates a refrigerant charge of 50g

2 YEARS WARRANTY ON ALL PARTS & LABOUR
EXTRA 2 YEARS WARRANTY ON PARTS WHEN YOU REGISTER WITH US ONLINE

* All prices are EX-GST